EN

CERAMIC FAN HEATER for BATHROOM USE – IP21

Dream

OPERATING INSTRUCTIONS

Read the instructions carefully before operating the appliance or carrying out maintenance operations.
Observe all the safety instructions; failure to observe the instructions may lead to accidents and/or damage. Store these instructions in a safe place for future reference.

GENERAL SAFETY INFORMATION

- Use this fan heater only as outlined in this manual. Any other use not recommended by the manufacturer may cause fire, electric shock or injury to persons.
- Make sure that the type of mains power complies with the electrical requirements of the fan heater (220-240 V~/50 Hz).
- This appliance can be used by children aged from 8 years and above and people with reduced physical, sensory or mental capabilities or lack of experience and knowledge if they have been given supervision or instruction concerning use of the appliance in a safe way and understand the hazards involved.
- Children shall not play with the appliance.
- Cleaning and user maintenance shall not be made by children without supervision.
- This product is not a toy. Children under the age of 3 years must be kept out of reach unless properly supervised, to ensure that they do not play with the appliance.
- Children aged between 3 and 8 years must only be able to turn the appliance on/off, provided that the appliance has been placed in its normal operating position, that instructions have been given on how to use the equipment safely, and that its risks have been understood.
- Children aged between 3 and 8 years must not be able to plug in, adjust, clean or perform any maintenance on the appliance.
- **WARNING:** certain parts of this product may become very hot and cause burns. Special care should be taken when children and vulnerable people are nearby.
- To avoid the risk of accidentally resetting the thermal protection, this appliance must not be powered through an external switching device, such as a timer, or connected to a circuit that is switched on and off by the utility.
- **WARNING: do not use the fan heater with a controller or any other device that activates the appliance automatically, as there may be a risk of fire if the fan heater is covered or incorrectly positioned.**
- Do not restrict the air inlet and outlet grilles.
- The appliance heats up significantly when running and can cause burns. Avoid unprotected contact with the hot surface.

- Keep flammable materials, such as furniture, cushions, blankets, paper, cloths, curtains and similar items at least 1 m away from the front, sides and back of the appliance.
- Disconnect the mains power when the appliance is not in use or during cleaning.
- Avoid using the fan heater in dusty environments or in the presence of flammable vapours (e.g. in workshops or garages).
- Do not place anything on the product; avoid placing wet garments on the fan heater.
- Use the fan heater in a well-ventilated area.
- Avoid placing fingers or foreign objects in the air inlet/outlet grilles, as this may lead to electric shock or fire and may damage the appliance.
- To prevent the risk of fire, do not block the grilles or tamper with them in any way while the fan heater is in use.
- **Do not use the appliance if the power cord or plug are damaged**. Contact a service centre to replace a damaged power cord, so as to avoid any safety risks.
- Do not use the appliance if it has fallen from a certain height or if it has been damaged in any way. Contact a service centre to check the fan heater or make any necessary electrical or mechanical repairs.
- The most common cause of overheating is the build-up of dust in the appliance. Remove the accumulated dust by pulling out the plug and cleaning the grilles using a vacuum cleaner.
- Do not use any abrasive products to clean the appliance. Clean it using a damp cloth (not wet) rinsed with soapy water. Remove the plug from the socket before performing any maintenance.
- To disconnect the fan heater, turn the switch to OFF and remove the plug from the socket. Pull on the plug only. Do not pull on the cord when turning off the fan heater.
- Do not place any objects on the cable and avoid bending the latter.
- Extension cords are not advisable, as they may overheat and cause the risk of fire. Never use a single extension cord to operate multiple appliances.
- Do not immerse the power cord, plug or any other part of the appliance in water or other liquids.
- Do not touch the plug with wet hands.
- Do not place the fan heater above or near another heat source.

WARNING: AVOID COVERING THE FAN HEATER TO PREVENT IT FROM OVERHEATING.
The symbol below signals this warning:

- The fan heater may cause the risk of fire if, while operating, it is covered or comes into contact with **flammable** material including curtains, drapery, blankets, etc. **KEEP THE FAN HEATER AWAY FROM THESE MATERIALS**.
- Do not connect the fan heater to the power supply until it has been correctly assembled or positioned.
- Do not run the cord under carpets. Do not cover the cord with blankets, carpets or similar materials. Place the cord far away from busy areas, or in a place where it cannot be pulled out accidentally.
- Do not operate the fan heater in close proximity to bathtubs, showers, washbasins or pools.
- The appliance is equipped with IP21 protection for use in private bathrooms in Zone 3.
-

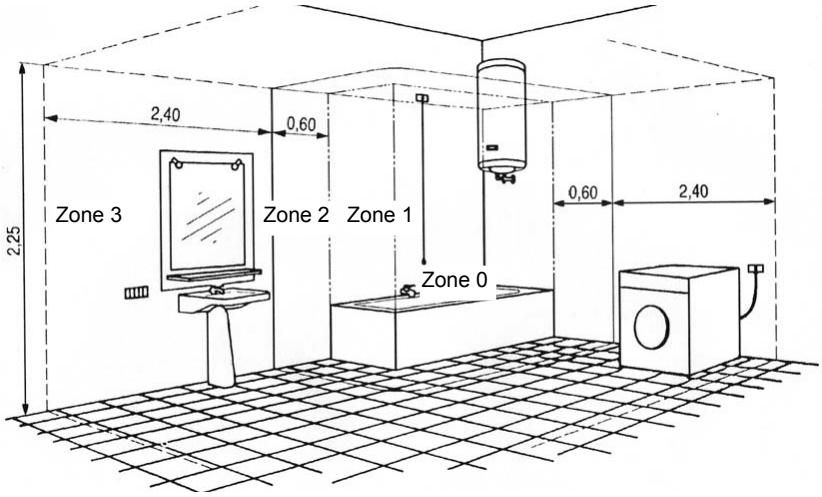

- Do not position the fan heater beneath a power socket.
- Do not operate the appliance outdoors.
- Upon initial start-up, the fan heater may emit a slight, harmless smell. This smell is a normal effect of the initial heating up of the internal heating elements, and should not recur later on.

WARNING:
THE ON/OFF SWITCH IS NOT THE ONLY METHOD OF DISCONNECTING THE MAINS POWER.
ALWAYS UNPLUG THE APPLIANCE DURING MAINTENANCE OPERATIONS, WHEN MOVING IT OR WHILE IT IS NOT IN USE.

- A fan heater contains parts that generate electrical arcs and sparks. It must not be used in potentially dangerous areas such as those subject to the risk of fire or explosion, or areas filled with chemical substances or humidity.
- Do not use the appliance on soft surfaces such as beds, where the grilles may get covered. Always rest the fan heater on a flat and stable surface when it is running, so as to prevent it from toppling over. Arrange the cord so that the fan heater and other objects do not rest on it.
- Always unplug the appliance when it is not in use.
- Turn the appliance off if unattended, in order to prevent accidents.
- In the event of any anomalies (abnormal noise or a strange smell), immediately turn off the appliance; do not attempt to repair it but take it to your local service centre.

DESCRIPTION OF PARTS

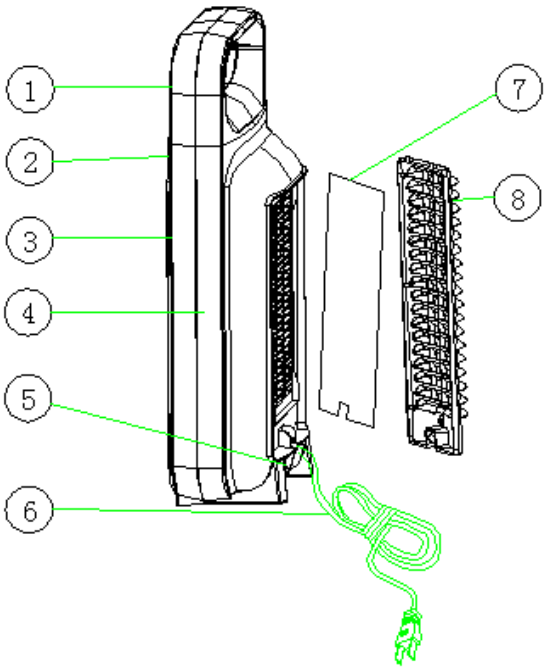

1. Hot air outlet grille

2. Presence sensor

3. Front panel

4. Rear panel

5. ON/OFF switch

6. Power cord

7. Dust filter

8. Filter cover

HOW TO USE THE FAN HEATER

Place the fan heater in a vertical position on a flat and stable surface.
Install the filter inside the rear cover and re-close the latter.
Connect the power cord to a suitable electric socket (220-240 V~/50 Hz).
Use the handle to move the appliance.

CONTROL PANEL

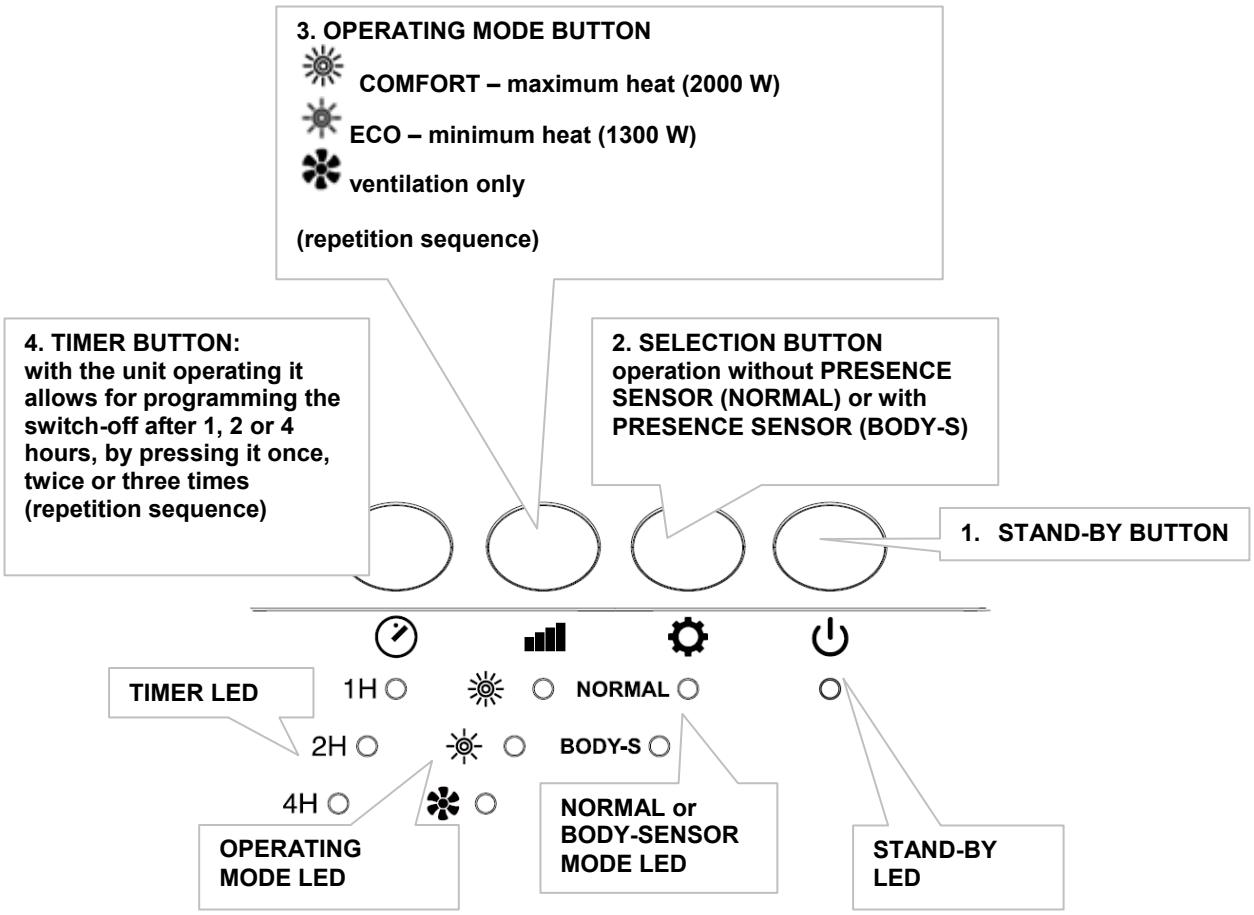

Move the switch-on button (on the rear, beneath the air intake grille) to position 'I'. When the appliance emits a beep, this means that the fan heater is ready for use (stand-by). The STAND-BY LED is lit.

By pressing the STAND-BY button '⏻', the appliance will start functioning in NORMAL mode, at the COMFORT heat level .

At this stage it is possible to leave the NORMAL operating mode or select the BODY-SENSOR mode (activation of the PRESENCE SENSOR): the corresponding LED will light up.

In both the NORMAL and in the BODY-SENSOR modes, it is possible to select the COMFORT mode (maximum heat 2000 W) or the ECO mode (minimum heat 1300 W) or cool ventilation (seq.). It is also possible to set the timer for switch-off, after 1, 2 or 4 hours.

When the COMFORT mode is selected, the appliance will first operate for 10" at minimum power before activating the maximum heat mode.

If the unit is operating and the STAND-BY button is pressed, the unit will continue to ventilate for a few minutes before switching off completely, to cool the ceramic heating element.

If the unit has been in stand-by mode for quite some time, so that the heating element has already cooled down, pressing the ON/OFF button causes the unit to switch off instantly, without ventilating.

In the BODY-SENSOR mode: every 2 minutes the unit detects the presence of people in the room, in the range of approximately 2 metres. If is does not detect anyone and the ECO or COMFORT modes have been selected, the heating element switches off but the fan will continue operating for 8 minutes: the unit will then enter the stand-by mode. If the cold ventilation mode is selected, the fan will continue to operate for 10 minutes before entering the stand-by mode.

To switch off the fan heater completely, move the on/off button to the "0" position.

The appliance is equipped with an anti-tipping device which interrupts operation when the product is tilted.
Do not position the appliance on its side or upside down.

CAUTION: ALWAYS UNPLUG THE APPLIANCE BEFORE CLEANING OR MAINTENANCE OPERATIONS.
IMPORTANT: DO NOT IMMERSE THE CERAMIC FAN HEATER IN WATER

Cleaning the outside surface of the appliance
Use a soft cloth to remove any dust from the fan heater.
If the fan heater is excessively dirty, use a soft cloth dampened with water and neutral detergent at a temperature below 50°C. Leave the fan heater to dry completely before using it again.
Do not use corrosive detergents or solvents such as petrol. Do not wash the appliance with water. When cleaning the appliance, do not use oils, chemical substances or other items that may damage the surface.
Use a vacuum cleaner to remove dust from the air inlet/outlet grilles.

Monthly cleaning the air filter, if necessary.
Remove the air filter for cleaning as shown in the diagram below.

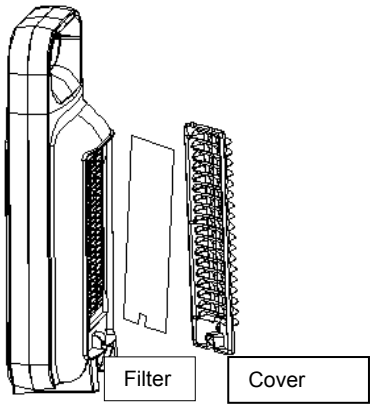

If the appliance is cleaned with water, make sure that the air filter is dry before re-installing it onto the appliance.

STORAGE
If the appliance is not used for prolonged periods, it must be stored together with this manual in its original packaging, in a cool and dry place.

MAINTENANCE AND STORAGE

RRECT DISPOSAL OF THE PRODUCT, PURSUANT TO DIRECTIVE 2012/19/EU ON WASTE ELECTRICAL AND ELECTRONIC EQUIPMENT
At the end of its useful life, this appliance must not be disposed of together with household waste. We call your attention to the crucial role played by the consumer in the reuse, recycling and other forms of recovery of such waste.
The appliance must be disposed of at a registered local authority collection point or returned free of charge to the retailer on purchase of a new like-for-like product.
Sorted disposal of electric and electronic equipment prevents the negative effects on the environment and human health resulting from improper scrapping, and also allows the materials from which it is made to be recovered and recycled, with significant savings in terms of energy and resources.
The sorted disposal requirement is indicated by the crossed out waste bin label displayed on the appliance.