argo

improve your life

Home comfort systems

made in Italy

professional catalogue

CONTENTS

The Company	05
The line-up	15
iM - MONOBLOC air/water heat pump	21
iSERIES - mixed system - air/air and air/water SPLIT heat pumps	41
iSERIES - outdoor units	61
iSERIES - hydronic and direct-expansion indoor units	81
EMIX and EMIX TANK - domestic hot water production	109
Accessories	121
Installation diagrams	135

argo

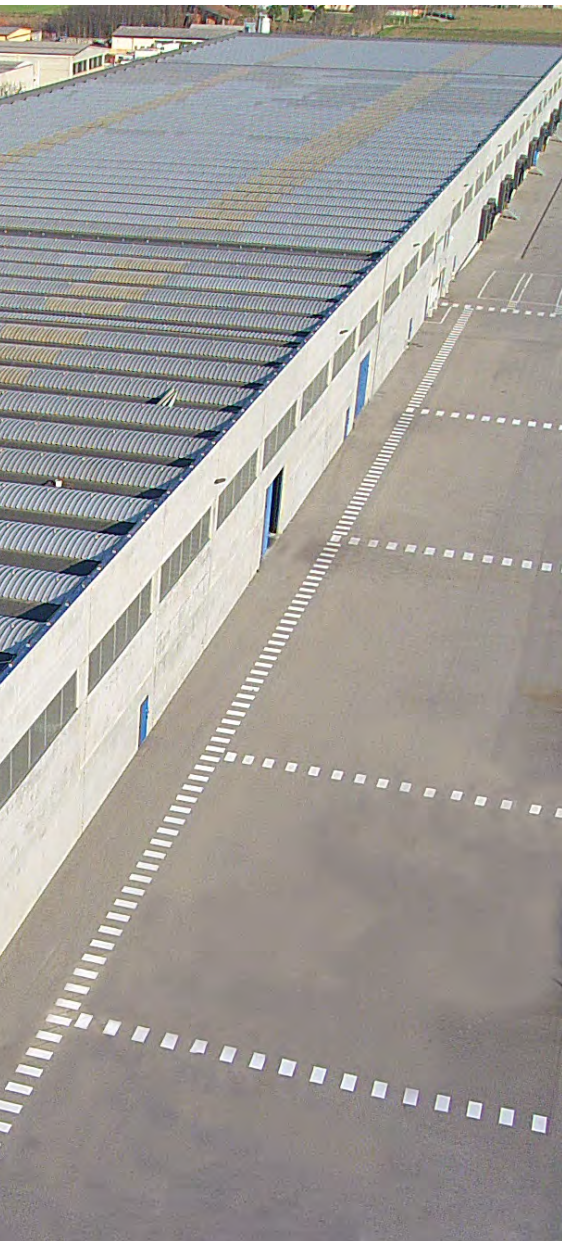

our history

We are an historic Italian company specialised in the production and marketing of air-conditioning products and heating systems, founded in 1929 in Cavaria in the Province of Varese. Here, on a total surface of 42,000 sq.m., we still host today, among other functions: production, research, development and quality control. In addition to these premises, we have a venue in Alfianello, near Brescia, which hosts a large logistics centre and the management headquarters in 32,000 sq.m.

our team

We have an extensive sales network all over the nation which allows us to be easily reachable and aligned with local supply needs that, also due to different climatic conditions, require specific know-how.

technical assistance

In addition to the sales network, we have 500 service centres (CAT) all over Italy, that are constantly trained and strictly connected to the headquarters, and that ensure answers and timely and qualified interventions all over the country.

3-WAY VALVE KIT
DAB

product research and development

We are now on the market with a commercial offer which includes: heat pumps for heating and domestic hot water production, products for cooling, heating and air treatment, mainly for residential buildings.

Our complete autonomy in industrial and engineering intelligence is part of our company's assets which has been growing for more than 90 years. Research, experimentation and forefront production technologies and equipment allow us to offer quality systems with high technical performance. The developed skills range from mechanical design to calculations and thermodynamic simulations, product engineering, electronic design, control algorithm definition, field test supervision and testing systems.

argo academy

ARGO ACADEMY is an innovative space that has recently been opened in the production premises in Gallarate.
This facility is provided with the most modern work equipment and welcomes customers and collaborators for training activities that are structured on several specialisation levels.
To ensure high learning standards, the training offer combines theoretical activities with several operative sessions, thanks to the full functionality of the systems installed inside the showroom.

main goals

- TECHNICAL TRAINING on several levels for operators who work in the air conditioning and heating sector
- COMMERCIAL TRAINING with constant updates on the Argo product range

the recipients of our training offer

- INSTALLERS (8-20 participants)
- AGENTS - DISTRIBUTORS (8-20 participants)
- DESIGNERS – HEATING ENGINEERS (4-10 participants)

types of training offer

To pursue high learning standards, our training offer is divided by type of product, application sector and level of detail in the topics:

1. Product type: direct expansion/hydronic solutions

2. Application sector: residential/commercial/big systems

3. Specialisation level: base - installers/advanced - designers

the courses

The training offer is initially articulated in the following courses:

1. Residential – air conditioning and direct expansion: monosplit and multiplit systems

2. Residential – hydronic heat pumps: monobloc units (iM) and iSERIES split systems

3. Commercial and big systems

Line-up

Air/water heat pumps - MONOBLOC

	MODEL	1ph	3ph	Nominal capacity [kW]		ErP READY A2W Energy class	
				Heating	Cooling	Heating	Cooling
	AIM06EMX	●		5.8	4.8	A++	A+
	AIM08EMX	●		8.1	5.9	A++	A+
	AIM11EMX AIM11EMX3PH	●	●	10.4	7.7	A++	A+
	AIM14EMX3PH		●	13.6	10.0	A++	A+

Available accessories (detailed technical sheets from page 116)

- 40-litre tank/isolated separator, 6 connections (iM06 - iM08)
- 80-litre tank/isolated separator, 6 connections (iM11 - iM14)
- 2 kW electric heating element for a 40-80-litre tank/separator
- Remote control panel
- EMIX/EMIX TANK
- DHW kit (3 kW Electric heating element, 300-litre tank, diverter valve, control panel)
- iModbus (Gateway Modbus)

Air/water heat pumps - SPLIT

	MODEL	1ph	3ph		MODEL	A2W		ErP READY A2W		
						Nominal capacity [kW]		Energy class		
						Heating	Cooling	Heating 35 °C	Heating 55 °C	Cooling
	AEI1G50EMX	●			AUAH	4.1	5.3	A++	A+	A++
	AEI1G65 EMX/ AEI1G65 EMX3PH	●	●		AUBH	6.5	5.6	A++	A+	A++
	AEI1G80BEMX/ AEI1G80EMX3PH	●	●		AUCH	8	6.9	A++	A+	A++
	AEI1G110BEMX/ AEI1G110EMX3PH	●	●		AUCH	10.6	9.1	A++	A+	A++
	AEI1G140EMX3PH		●		AUDH	13.8	11.6	A++	A+	A++

Available accessories (detailed technical sheets from page 116)

- 40-litre tank/isolated separator, 6 connections (iM06 - iM08)
- 80-litre tank/isolated separator, 6 connections (iM11 - iM14)
- 2 kW electric heating element for a 40-80-litre tank/separator
- Remote control panel
- EMIX/EMIX TANK
- DHW kit (3 kW Electric heating element, 300-litre tank, diverter valve, control panel)

Line-up

The mixed system - air/air and air/water SPLIT heat pumps

Outdoor units

	MODEL	APPLICATIONS	1ph	3ph	A2A	ErP READY A2A	A2W	ErP READY A2W				
					Nominal capacity [kW]		Energy class		Nominal capacity [kW]		Energy class		
					Heating	Cooling	Heating	Cooling	Heating	Cooling	Heating 35 °C	Heating 55 °C	Cooling
	AEI1G42EMX	Dual	●		4.2	3.5	A+	A++	-	-	-	-	-
	AEI1G50EMX	Dual	●		5.0	4.9	A+	A++	4.1	5.3	A++	A+	A++
	AEI1G65 EMX/ AEI1G65 EMX3PH	Triple	●	●	6.5	5.8	A+	A++	6.5	5.6	A++	A+	A++
	AEI1G80BEMX/ AEI1G80EMX3PH	Quadruple	●	●	8.0	6.9	A+	A++	8	6.9	A++	A+	A++
	AEI1G110BEMX/ AEI1G110EMX3PH	Quadruple	●	●	11.0	8.7	A+	A++	10.6	9.1	A++	A+	A++
	AEI1G140EMX3PH	Quintuple		●	12.0	10.6	A+	A++	13.8	11.6	A++	A+	A++

Available accessories (detailed technical sheets from page 116)

- 40-litre tank/isolated separator, 6 connections (G65 - G80)
- 80-litre tank/isolated separator, 6 connections (G110 - G140)
- 2 kW electric heating element for a 40-80-litre tank/separator
- Remote control panel
- EMIX/EMIX TANK
- DHW kit (3 kW Electric heating element, 300-litre tank, diverter valve, control panel)

Indoor hydronic units

	MODEL	TYPE	MAIN FUNCTIONS	SIZE
	AUAH AUBH AUCH AUDH	Wall Shaft	HOME AUTOMATION · EC PUMP · ELECTRIC BACK UP	A B C D

Direct-expansion indoor units

	MODEL	TYPE	MAIN FUNCTIONS	SIZE
	AWIAS19 AWIBS19	High-Wall	REMOTE CONTROL · TiO_2 FILTER · IFEEL · DC MOTOR · COMPACT · DOUBLE DISCHARGE · LIGHT OFF	A B
	AWIAS7DC AWIBS9DC	High-Wall	REMOTE CONTROL · ACTIVE CARBON FILTER · IFEEL · DC MOTOR · COMPACT · DOUBLE DISCHARGE · LIGHT OFF	A B
	AFIAS11DC AFIBS11DC	Floor	REMOTE CONTROL · TiO_2 FILTER · IFEEL · DC MOTOR · RH% CONTROL	A B
	FCIAS8DC FCIBS9DC	Floor Ceiling	REMOTE CONTROL · IFEEL · DC MOTOR · RH% CONTROL	A B
	ASIAS8DC ASIBS9DC ASICS11DC ASIDS13DC	Cassette	REMOTE CONTROL · WATER PUMP · IFEEL · DC MOTOR · RH% CONTROL	A B C D
	SDIAS8DC SDIBS9DC	Ducted low static pressure	REMOTE CONTROL · ACTIVE CARBON FILTER · IFEEL · ΔP · DC MOTOR · RH% CONTROL	A B
	ADIAS19DC ADIBS13DC ADICS13DC	Ducted medium static pressure	REMOTE CONTROL · ΔP+ · IFEEL · DC MOTOR · RH% CONTROL	A B C

DHW production solutions

1 Argo exclusive technology

EMIX TANK is directly connected to the outdoor unit, which is fitted with a special gas connection specifically for this purpose. The EMIX TANK is available in the version with a storage tank designed to hold from 200 to 300 litres of domestic hot water, and is provided with an internal exchanger with forced circulation for solar thermal energy.

EMIX TANK 200

EMIX TANK 300

2 Argo exclusive technology

EMIX is directly connected to the outdoor unit, which is fitted with a special gas connection specifically for this purpose. The storage tank for domestic hot water, to be combined with the unit which can be supplied by third parties, must have a volume between 80 and 300 litres.

EMIX

Tank (80-300 l)

3 Standard technology

The production of domestic hot water occurs by increasing the delivery temperature of the heat-transfer fluid and the switching of a three-way valve towards the exchanger of the dedicated tank. This tank can be supplied by the company (300-litre volume, equipped with suitable exchanger for heat pump, electric heating element and control panel) or by third parties.

Diverter valve

Control panel

300-litre tank

Production of domestic hot water and at the same time heating and cooling of rooms

EMIX/EMIX TANK is a component of the iSERIES/iM system and is part of the wide range of indoor units; it can produce domestic hot water using a thermodynamic source all year round, by working simultaneously with the system regardless of its operating mode.
This innovative concept goes beyond the 'traditional' methods of producing domestic hot water, which instead involves transferring energy using diverter valves, which actually
interrupt the flow of the fluid towards the system.

Production of domestic hot water for free as you cool rooms

While the heat pump is operating in cooling mode, EMIX/EMIX TANK is able to transfer the heat extracted from the environment directly to the domestic hot water (ENERGY RECOVERY FUNCTION).
By taking advantage of the desuperheating heat from the refrigerating cycle, EMIX/EMIX TANK can actually produce domestic hot water free of charge of up to 75 °C (when at least one indoor unit is operating) by directly using the energy of the single heat pump.

iM

Air/water heat pumps - MONOBLOC

argo

improve your life

Renewable energy systems for maximum comfort

iM

With iM, you can build your dream home with:

- Heating and cooling of rooms with hydronic terminals
- Domestic hot water production with high-efficiency systems and energy recovery features (EMIX and EMIX TANK models)
- Domestic hot water production with 3-way valve and DHW tank

iM - MONOBLOC
heat pump
EMIX TANK

iM - the advantages

UNIQUE AND INNOVATIVE

iM is the only heat pump capable of producing domestic hot water at the same time as heating and cooling rooms, thanks to a special refrigerant gas connection. During cooling mode, water is heated free of charge using EMIX and EMIX TANK heat recovery technology.

HIGH PERFORMANCE AND SAVINGS

Thanks to the FULL DC INVERTER technology, which can optimise the operation of the compressor and fans, iM achieves an energy efficiency class A++ for heating and an energy efficiency class A for domestic hot water production, ensuring comfort and energy savings.

EFFICIENT AND SILENT

iM is equipped with circulation pump, compressor and DC inverter fans that modulate the power and speed based on real needs. The high level of soundproofing, the ability of the Argo-exclusive electronics to optimally operate the compressor cycle ("Smooth defrost") and the implementation of the ECO function all guarantee a low running noise.

EVERYTHING UNDER CONTROL

iM is equipped with temperature control systems for the water and gas so as to optimise the system operation.
It is also fitted with control systems for the refrigerant pressure and water flow rate of the system to protect the system under any operating conditions.

OPEN AND FLEXIBLE SYSTEM

iM is compatible with third-party control systems and advanced systems too, and can be integrated with additional external heating sources (gas boilers, solid-fuel generators, etc.). It can also be combined with solar panels used to provide hot water and heating or to generate electricity.

SIMPLE AND INTUITIVE INTERFACE

Featuring an LCD display, the digital control panel is easy to use, both for operators (fitters and Service Centres) and for end users, who can also decide to add a second drive board to their household.

iM - connectivity

Inputs and outputs of iM

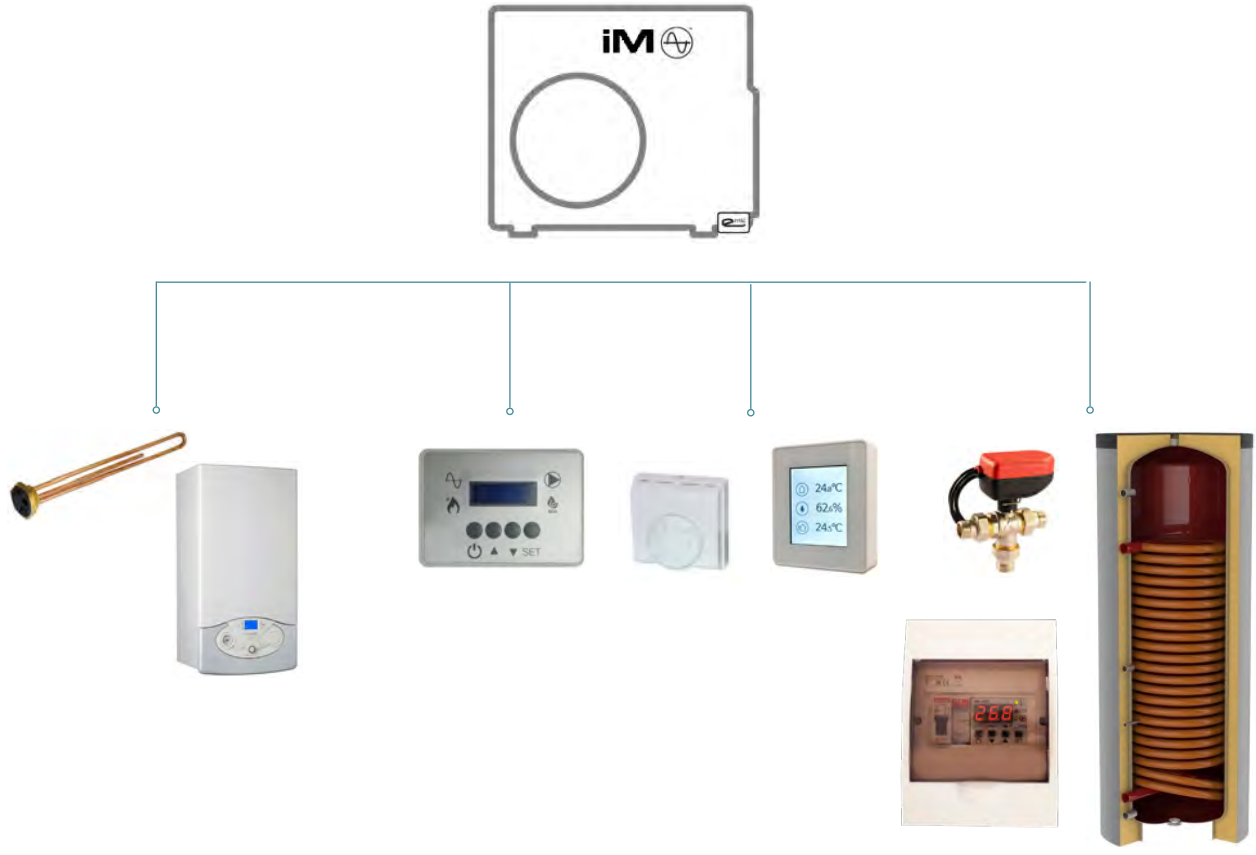

No. 4 DIGITAL INPUTS (dry contacts or configurable 24 VAC contacts)

1) ON/OFF: stand by or operating;
2) Summer/Winter: summer/winter switching;
3) DHW SET POINT or SECOND SET POINT;
4) ECO MODE: if the contact is open, the maximum usable electric power is 100%; if it's closed it can be set with a parameter which is a percentage of the maximum value.

No. 4 DIGITAL OUTPUTS

1) 230 VAC output for the DHW diverter valve servomotor (deviation towards DHW);
2) 230 VAC output for the DHW diverter valve servomotor (re-deviation towards system - optional);
3) 230 VAC output for ALARM/DEFROST/DHW PRODUCTION which can be configured individually or in combination;
4) 230 VAC output for additional element (electric heating element and boiler, etc.) through external dedicated relay switch if required.

No. 2 ANALOGUE INPUTS

1) Analogue input 0÷10 V for external regulator or advanced room thermostat;
2) Input for additional external air sensor: installation of a second external air sensor to read the temperature in a more suitable position (if required). Automatic recognition of the unit.

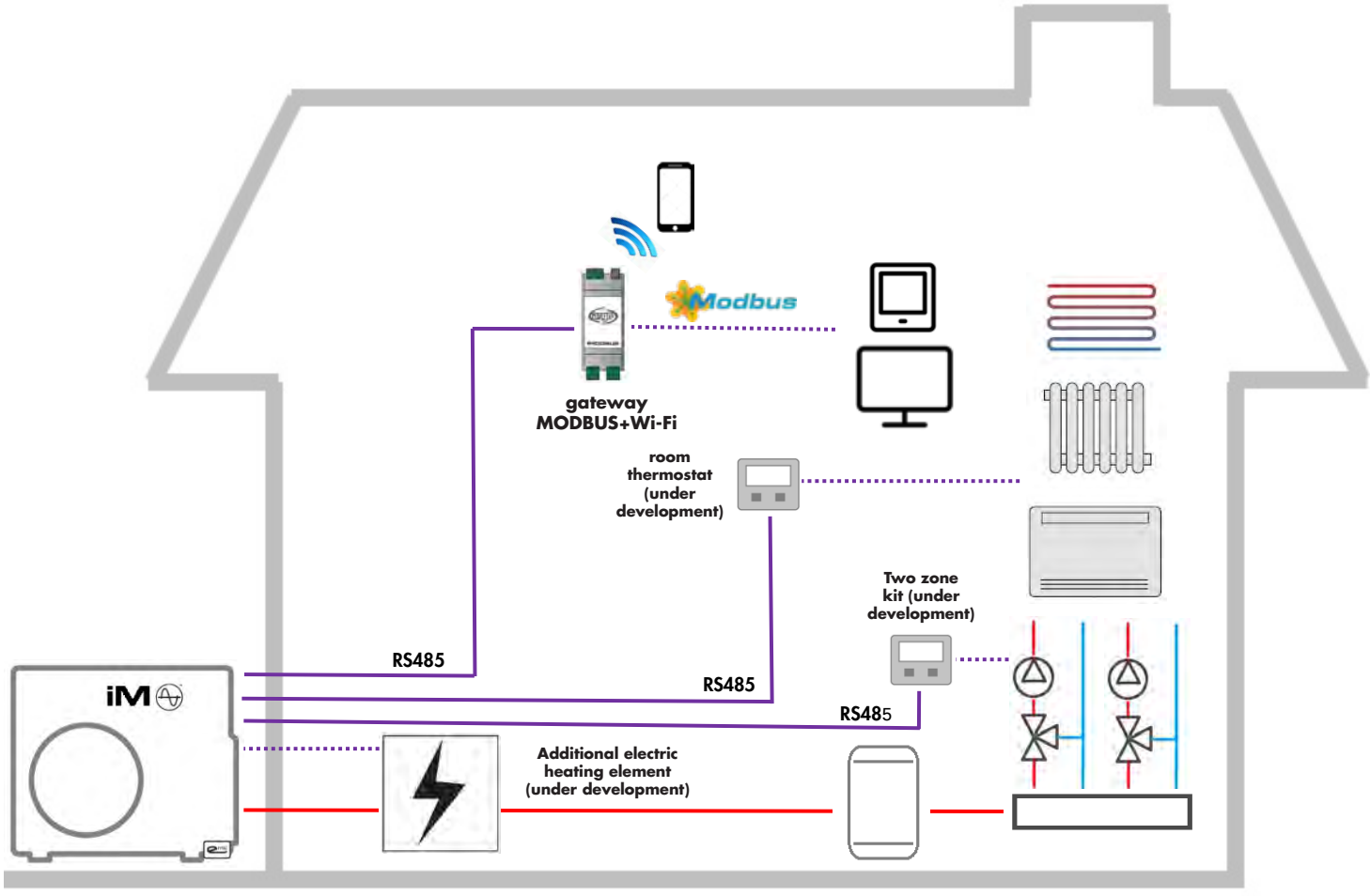
Modbus
gateway
MODBUS+Wi-Fi
room
thermostat
(under
development)
Two zone
kit (under
development)
RS485
RS485
RS485
iM
Additional electric
heating element
(under development)

AIM06 EMX data sheet

The compact unit for small-sized homes

The smallest monobloc unit from the iM range can be used as part of the heating and cooling systems fitted to small-sized homes thanks to its ultra-compact design.
It can be connected to the EMIX or to EMIX TANK to produce domestic hot water directly from the thermodynamic source, using heat recovery during air-conditioning mode in the summer.

A | A++ | EC PUMP | ELECTRIC BACK UP | iCOP | A2W

Data based on the EN 14511-3:2013 standard

Heating

LWT [°C]	Outdoor air temperature - Dry Bulb (Wet Bulb) - °C									
	-7 (-8)		-2 (-3)		2 (1)		7 (6)		12 (11)	
	Qh [kW]	COP	Qh [kW]	COP	Qh [kW]	COP	Qh [kW]	COP	Qh [kW]	COP
35	**4.20**	**2.47**	**4.29**	**2.74**	**4.55**	**3.14**	**5.80**	**4.11**	**6.72**	**4.66**
45	**3.90**	**2.01**	**4.34**	**1.99**	**4.62**	**2.27**	**4.50**	**2.65**	**6.44**	**3.06**
55	**3.10**	**1.70**	**3.25**	**1.84**	**3.21**	**1.96**	**4.00**	**2.04**	**5.50**	**2.58**

LWT: Leaving water temperature
Qh: Heat capacity
COP: Coefficient of performance

Application data
Water inlet/outlet temperature difference = 5 °C, 8 °C for LWT = 55 °C

Cooling

LWT [°C]	Inlet outdoor air temperature - °C	
	35	
	Qc [kW]	EER
7	**3.40**	**2.27**
18	**4.80**	**3.30**

LWT: Leaving water temperature
Qc: Cooling capacity
EER: Energy efficiency ratio

Application data
Water inlet/outlet temperature difference = 5 °C

OUTDOOR UNIT				AIM06EMX	
Matchable units for Domestic Hot Water (DWH) production				EMIX TANK V2 (200-300 liters) EMIX V1 + External Tank External Tank + 3-way valve	
				Cooling	Heating
Performance according to EN 14511	Air +35°C - Water 23/18°C Air + 7°C - Water 30/35°C	Nominal-max. Cooling/Heating capacity	kW	4.80 - 5.80	5.80 - 6.60
		Nominal electric power input	kW_{el}	1.41	1.41
		Nominal EER/COP		3.41	4.12
	Air +35°C - Water 12/7°C Air - 7°C - Water 30/35 °C	Nominal-max. Cooling/Heating capacity	kW	3.40-3.80	4.20
		Nominal electric power input	kW_{el}	1.50	1.70
		Nominal EER/COP		2.27	2.47
Performance according to ERP Ecodesign EN 14825	LOW TEMPERATURE AVERAGE season	Nominal Heating capacity	kW	5.00	
		Seasonal energy efficiency ηs	%	153	
		SCOP		3.90	
		Energy efficiency class		A++	
	MEDIUM TEMPERATURE AVERAGE season	Nominal heating capacity	kW	4.00	
		Seasonal energy efficiency ηs	%	111	
		SCOP		2.85	
		Energy efficiency class		A+	
DHW Performance according to EN 16147	With 300L tank and diverting valve	Load profile		XL	
		Energy efficiency class		A	
		DHW COP		2.18	
		ERP efficiency	%	91	
		Heating-up time from 10°C to 47°C	h:m	4:04	
	With Emix Tank 200 V2	Load profile		L	
		Energy efficiency class		A	
		DHW COP		2.51	
		ERP efficiency	%	105	
		Heating-up time from 10°C to 50°C	h:m	3:09	
Unit operation data		Maximum outlet water temperature	°C	Up to 58	
		Outdoor temperature range (heating)	°C	-20 / +35	
		Outdoor temperature range (cooling)	°C	+10 / +47	
		Nominal water flow rate	m^3/h	at 35 °C	1.00
				at 45 °C	0.76
				at 55 °C	0.45
		Minimum efficient water volume of the system	l	40	
		Power supply (Voltage/Phases/Frequency)	V/Ph/Hz	230/1+T/50	
		Maximum electric consumption	kW/A	2.80/12.70	
		Fuse		16 A	
		Sound pressure	dB(A)	40	
Components and dimensions		Expansion vessel	l	2	
		Maximum pump pressure	m_{H2O}	6 (see H/Q diagrams)	
		Water connections	inch (")	3/4"	
		Safety valve	bar	3	
		Weight	kg	64	
		Dimensions H/W/D	mm	735/1030/400	
		Compressor type		Twin Rotary	
Refrigerant pipes to eMIX/eMIX TANK		Diameters (gas/liquid)	inch (")	3/8"	
		Maximum length	m	10	
		Minimum length	m	5	
		Max height difference IU-OU	m	10	
Refrigerant		Type and GWP		R410A / 2088 kg CO_2 eq.	
		Standard charge		1.30 kg / 2.71 Tons CO_2 eq.	

The equipment described in this catalogue contains HFC-410A-type fluorinated greenhouse gases. These products must be fitted by qualified staff pursuant to European regulations 303/2008 and 517/2014. PRELIMINARY data declared in accordance with REGULATION (EU) No 811/2013 of 18 February 2013 with regard to the energy labelling of space heaters, combination heaters, packages of space heater, temperature control and solar device and packages of combination heater, temperature control and solar devices, packages of combination heater, temperature control and solar devices, and with COMMISSION REGULATION (EU) No 813/2013 of 2 August 2013 implementing Directive 2009/125/EC of the European Parliament and of the Council with regard to ecodesign requirements for space heaters and combination heaters. Argoclima reserves the right to amend the data presented in this catalogue at any time and without notice.

AIM06 EMX data sheet

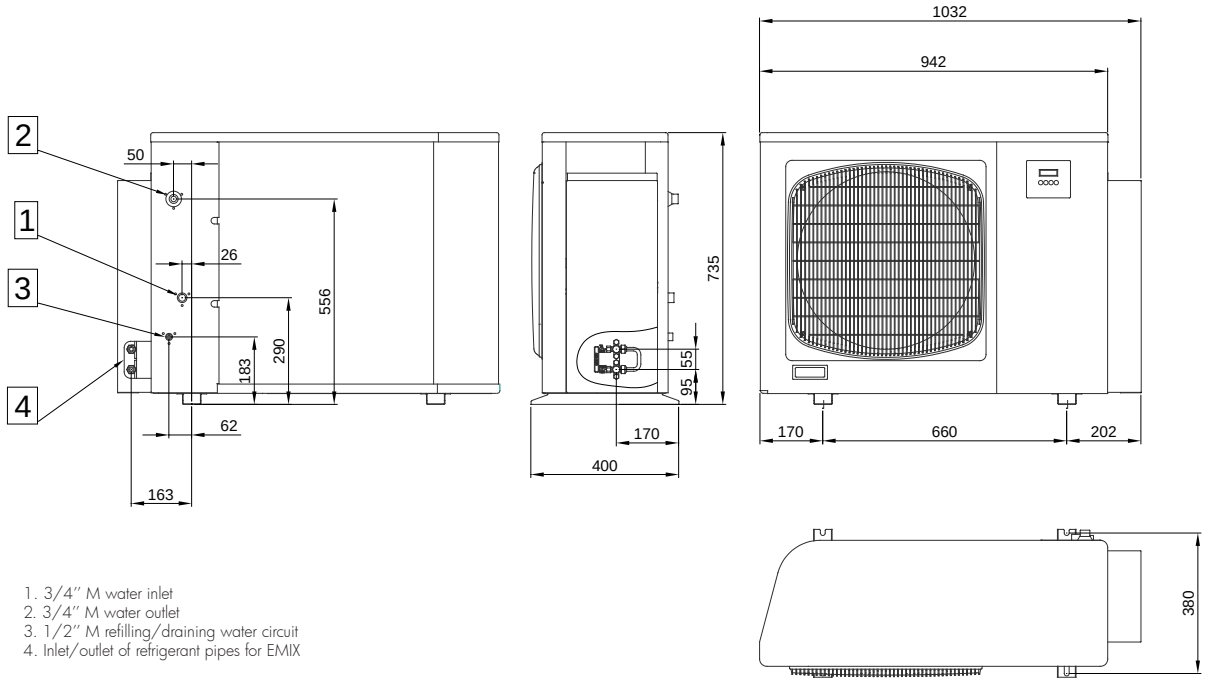

1. 3/4" M water inlet
2. 3/4" M water outlet
3. 1/2" M refilling/draining water circuit
4. Inlet/outlet of refrigerant pipes for EMIX

Characteristic curve of the pump and load losses in the unit

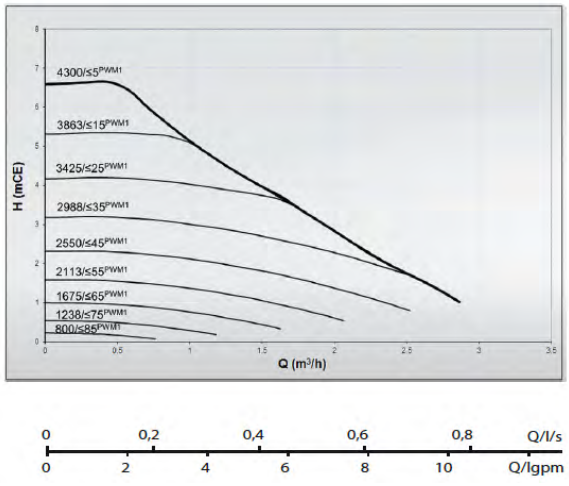

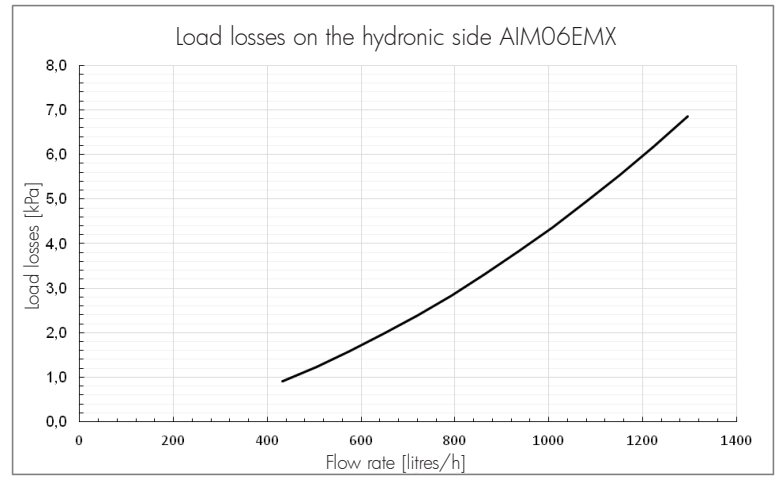

AIM08 EMX data sheet

Also suitable for individual households

With a nominal heat capacity of 8 kW, this monobloc unit from the iM range is ideal for use in medium-sized apartments and individual households. It can be connected to the EMIX or to EMIX TANK to produce domestic hot water directly from the thermodynamic source, using heat recovery during air-conditioning mode in the summer.

A | A++ | EC PUMP | ELECTRIC BACK UP | iCOP | A2W

Data based on the EN 14511-3:2013 standard

Heating

LWT [°C]	Outdoor air temperature - Dry Bulb (Wet Bulb) - °C									
	-7 (-8)		-2 (-3)		2 (1)		7 (6)		12 (11)	
	Qh [kW]	COP	Qh [kW]	COP	Qh [kW]	COP	Qh [kW]	COP	Qh [kW]	COP
35	**5.80**	**2.83**	**6.04**	**2.98**	**6.18**	**3.25**	**8.10**	**4.18**	**8.68**	**4.66**
45	**5.40**	**2.38**	**5.72**	**2.29**	**5.95**	**2.57**	**7.70**	**3.35**	**8.30**	**3.55**
55	**4.77**	**1.69**	**4.58**	**1.81**	**4.87**	**1.86**	**6.50**	**2.41**	**7.35**	**2.70**

LWT: Leaving water temperature
Qh: Heat capacity
COP: Coefficient of performance

Application data
Water inlet/outlet temperature difference = 5 °C, 8 °C for LWT = 55 °C

Cooling

LWT [°C]	Inlet outdoor air temperature - °C	
	35	
	Qc [kW]	EER
7	**4.70**	**2.22**
18	**5.90**	**3.42**

LWT: Leaving water temperature
Qc: Cooling capacity
EER: Energy efficiency ratio

Application data
Water inlet/outlet temperature difference = 5 °C

AIM08 EMX data sheet

OUTDOOR UNIT				AIM08EMX	
Matchable units for Domestic Hot Water (DWH) production				EMIX TANK V2 (200-300 liters) EMIX V1 + External Tank External Tank + 3-way valve	
				Cooling	Heating
Performance according to EN 14511	Air +35°C - Water 23/18°C Air + 7°C - Water 30/35°C	Nominal-max. Cooling/Heating capacity	kW	5.90-7.00	8.10-9.30
		Nominal electric power input	kW_{el}	1.72	1.93
		Nominal EER/COP		3.42	4.18
	Air +35°C - Water 12/7°C Air - 7°C - Water 30/35 °C	Nominal-max. Cooling/Heating capacity	kW	4.70-5.40	5.80
		Nominal electric power input	kW_{el}	2.11	2.05
		Nominal EER/COP		2.22	2.83
Performance according to ERP Ecodesign EN 14825	LOW TEMPERATURE AVERAGE season	Nominal Heating capacity	kW	7.00	
		Seasonal energy efficiency ηs	%	159	
		SCOP		4.05	
		Energy efficiency class		A++	
	MEDIUM TEMPERATURE AVERAGE season	Nominal Heating capacity	kW	6.00	
		Seasonal energy efficiency ηs	%	115	
		SCOP		2.96	
		Energy efficiency class		A+	
DHW Performance according to EN 16147	With 300L tank and diverting valve	Load profile		XL	
		Energy efficiency class		A	
		DHW COP		2.25	
		ERP efficiency	%	94	
		Heating-up time from 10°C to 47°C	h:m	3:41	
	With Emix Tank 300 V2	Load profile		XL	
		Energy efficiency class		A	
		DHW COP		2.56	
		ERP efficiency	%	106	
		Heating-up time from 10°C to 48°C	h:m	3:33	
Unit operation data		Maximum outlet water temperature	°C	Up to 58	
		Outdoor temperature range (heating)	°C	-20 / +35	
		Outdoor temperature range (cooling)	°C	+10 / +47	
		Nominal water flow rate	m^3/h	at 35 °C	1.39
				at 45 °C	1.31
				at 55 °C	0.70
		Minimum efficient water volume of the system	l	40	
		Power supply (Voltage/Phases/Frequency)	V/Ph/Hz	230/1+T/50	
		Maximum electric consumption	kW/A	3.50/15.90	
		Fuse		20 A	
		Sound pressure	dB(A)	43	
Components and dimensions		Expansion vessel	l	4	
		Maximum pump pressure	m_{H2O}	7 (see H/Q diagrams)	
		Water connections	inch (")	3/4"	
		Safety valve	bar	3	
		Weight	kg	73	
		Dimensions H/W/D	mm	835/1190/400	
		Compressor type		Twin Rotary	
Refrigerant pipes to eMIX/eMIX TANK		Diameters (gas/liquid)	inch (")	3/8"	
		Maximum length	m	10	
		Minimum length	m	5	
		Max height difference IU-OU	m	10	
Refrigerant		Type and GWP		R410A / 2088 kg CO_2 eq.	
		Standard charge		1.46 kg / 3.05 Tons CO_2 eq.	

The equipment described in this catalogue contains HFC-410A-type fluorinated greenhouse gases. These products must be fitted by qualified staff pursuant to European regulations 303/2008 and 517/2014. PRELIMINARY data declared in accordance with REGULATION (EU) No 811/2013 of 18 February 2013 with regard to the energy labelling of space heaters, combination heaters, packages of space heater, temperature control and solar device and packages of combination heater, temperature control and solar devices, packages of combination heater, temperature control and solar devices, and with COMMISSION REGULATION (EU) No 813/2013 of 2 August 2013 implementing Directive 2009/125/EC of the European Parliament and of the Council with regard to ecodesign requirements for space heaters and combination heaters. Argoclima reserves the right to amend the data presented in this catalogue at any time and without notice.

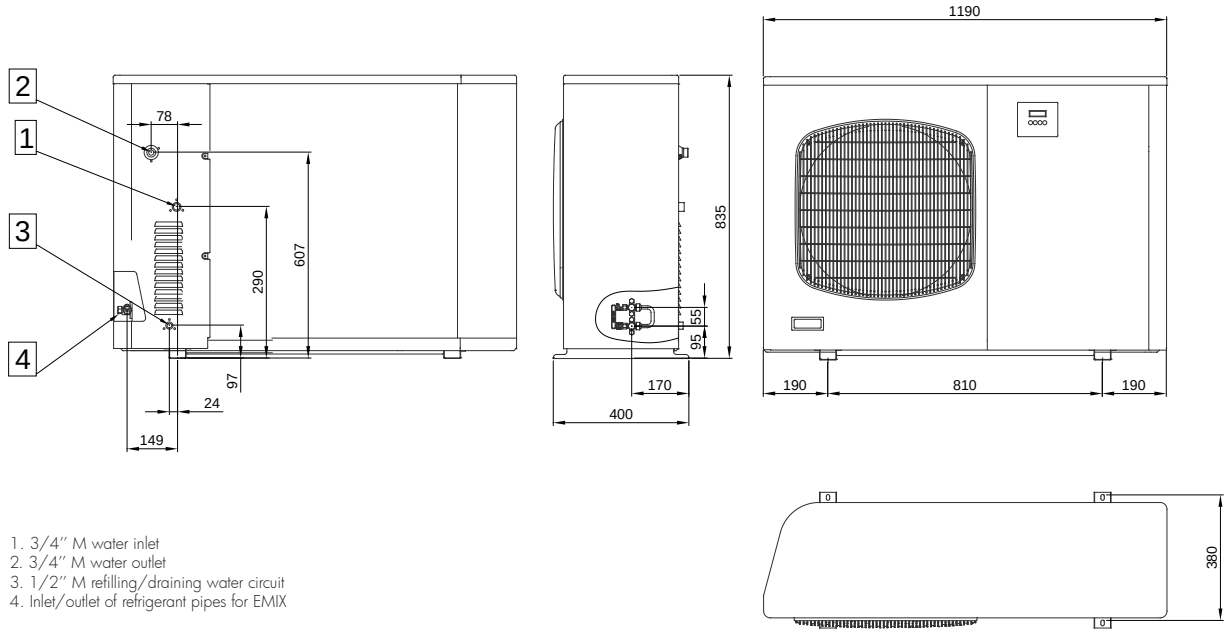

1. 3/4" M water inlet
2. 3/4" M water outlet
3. 1/2" M refilling/draining water circuit
4. Inlet/outlet of refrigerant pipes for EMIX

Characteristic curve of the pump and load losses in the unit

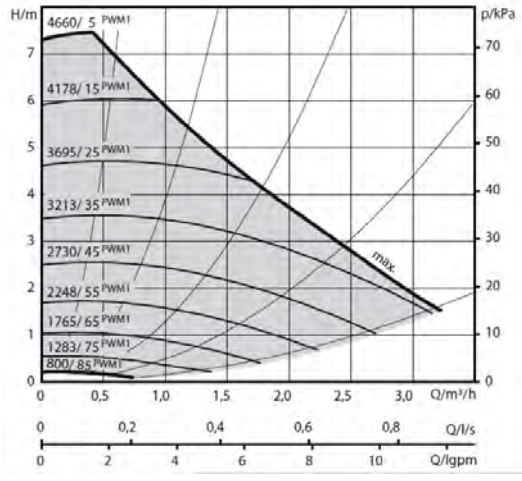

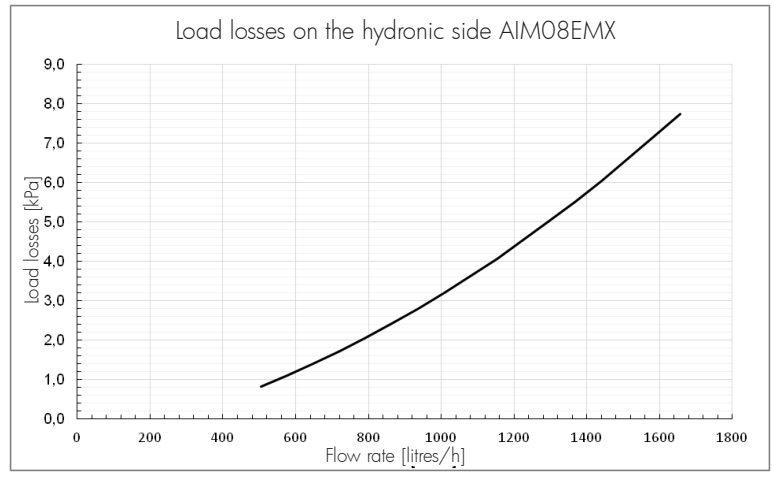

AIM11 EMX/3PH data sheet

Powerful, for large residential or commercial spaces

The 11-kW monobloc unit from the iM range is able to heat and cool extensive residential and commercial spaces. The unit is available in the single-phase and three-phase versions. It can be connected to the EMIX or to EMIX TANK to produce domestic hot water directly from the thermodynamic source, using heat recovery during air-conditioning mode in the summer.

A | A++ | EC PUMP | ELECTRIC BACK UP | iCOP | A2W

Data based on the EN 14511-3:2013 standard

Heating

LWT [°C]	Outdoor air temperature - Dry Bulb (Wet Bulb) - °C									
	-7 (-8)		-2 (-3)		2 (1)		7 (6)		12 (11)	
	Qh [kW]	COP	Qh [kW]	COP	Qh [kW]	COP	Qh [kW]	COP	Qh [kW]	COP
35	**7.40**	**2.62**	**7.39**	**2.89**	**8.04**	**3.34**	**10.40**	**4.09**	**11.46**	**4.62**
45	**6.90**	**2.33**	**7.30**	**2.48**	**7.70**	**2.79**	**9.80**	**3.28**	**10.80**	**3.06**
55	**6.20**	**1.67**	**6.64**	**1.89**	**6.75**	**2.10**	**8.30**	**2.36**	**9.53**	**2.61**

LWT: Leaving water temperature
Qh: Heat capacity
COP: Coefficient of performance

Application data
Water inlet/outlet temperature difference = 5 °C, 8 °C for LWT = 55 °C

Cooling

LWT [°C]	Inlet outdoor air temperature - °C	
	35	
	Qc [kW]	EER
7	**6.30**	**2.29**
18	**7.70**	**3.53**

LWT: Leaving water temperature
Qc: Cooling capacity
EER: Energy efficiency ratio

Application data
Water inlet/outlet temperature difference = 5 °C

OUTDOOR UNIT				AIM11EMX AIM11EMX3PH	
Matchable units for Domestic Hot Water (DWH) production				EMIX TANK V2 (200-300 liters) EMIX V1 + External Tank External Tank + 3-way valve	
				Cooling	Heating
Performance according to EN 14511	Air +35°C - Water 23/18°C Air + 7°C - Water 30/35°C	Nominal-max. Cooling/Heating capacity	kW	7.70-9.00	10.40-12.50
		Nominal electric power input	kW_{el}	2.18	2.54
		Nominal EER/COP		3.53	4.09
	Air +35°C - Water 12/7°C Air - 7°C - Water 30/35 °C	Nominal-max. Cooling/Heating capacity	kW	6.30-7.20	7.70
		Nominal electric power input	kW_{el}	2.65	2.18
		Nominal EER/COP		2.38	3.53
Performance according to ERP Ecodesign EN 14825	LOW TEMPERATURE AVERAGE season	Nominal Heating capacity	kW	10.00	
		Seasonal energy efficiency ηs	%	156	
		SCOP		3.97	
		Energy efficiency class		A++	
	MEDIUM TEMPERATURE AVERAGE season	Nominal Heating capacity	kW	8.00	
		Seasonal energy efficiency ηs	%	113	
		SCOP		2.9	
		Energy efficiency class		A+	
DHW Performance according to EN 16147	With 300L tank and diverting valve	Load profile		XL	
		Energy efficiency class		A	
		DHW COP		2.14	
		ERP efficiency	%	89	
		Heating-up time from 10°C to 47°C	h:m	2:40	
	With Emix Tank 300 V2	Load profile		XL	
		Energy efficiency class		A	
		DHW COP		2.55	
		ERP efficiency	%	106	
		Heating-up time from 10°C to 48°C	h:m	2:25	
Unit operation data		Maximum outlet water temperature	°C	Up to 58	
		Outdoor temperature range (heating)	°C	-20 / +35	
		Outdoor temperature range (cooling)	°C	+10 / +47	
		Nominal water flow rate	m^3/h	at 35 °C	1.78
				at 45 °C	1.68
				at 55 °C	0.89
		Minimum efficient water volume of the system	l	80	
		Power supply (Voltage/Phases/Frequency)	V/Ph/Hz	230/1+T /50-60 - 400/3+N+T/50	
		Maximum electric consumption	kW/A	20.50/4.50	
		Fuse		25 A (1ph) / 30 A (3ph)	
		Sound pressure	dB(A)	46	
Components and dimensions		Expansion vessel	l	4	
		Maximum pump pressure	m_{H2O}	7.5 (see H/Q diagrams)	
		Water connections	inch (")	1"	
		Safety valve	bar	3	
		Weight	kg	90	
		Dimensions H/W/D	mm	1070/1190/400	
		Compressor type		Twin Rotary	
Refrigerant pipes to eMIX/eMIX TANK		Diameters (gas/liquid)	inch (")	3/8"	
		Maximum length	m	10	
		Minimum length	m	5	
		Max height difference IU-OU	m	10	
Refrigerant		Type and GWP		R410A / 2088 kg CO_2 eq.	
		Standard charge		2.50 kg / 5.22 Tons CO_2 eq.	

The equipment described in this catalogue contains HFC-410A-type fluorinated greenhouse gases. The installation of these products must be carried out by qualified operators in accordance with the European standards 303/2008 and 517/2014. PRELIMINARY data declared in accordance with REGULATION (EU) No 811/2013 of 18 February 2013 with regard to the energy labelling of space heaters, combination heaters, packages of space heater, temperature control and solar device and packages of combination heater, temperature control and solar devices, packages of combination heater, temperature control and solar devices, and with COMMISSION REGULATION (EU) No 813/2013 of 2 August 2013 implementing Directive 2009/125/EC of the European Parliament and of the Council with regard to ecodesign requirements for space heaters and combination heaters. Argoclima reserves the right to amend the data presented in this catalogue at any time and without notice.

AIM11 EMX/3PH data sheet

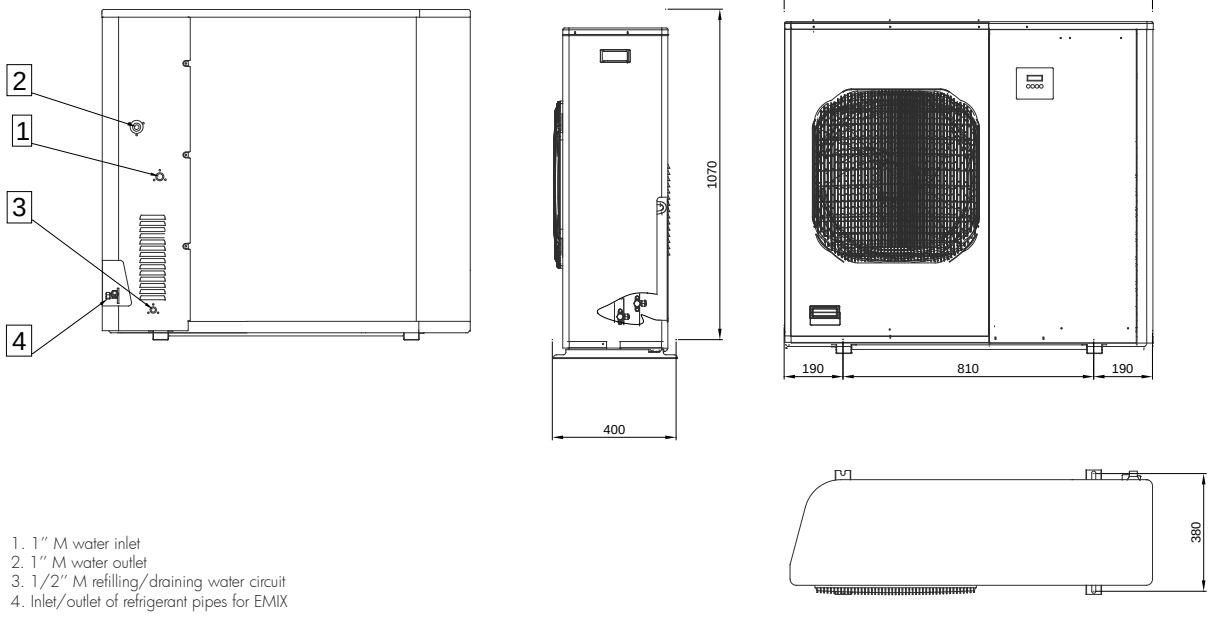

1. 1" M water inlet
2. 1" M water outlet
3. 1/2" M refilling/draining water circuit
4. Inlet/outlet of refrigerant pipes for EMIX

Characteristic curve of the pump and load losses in the unit

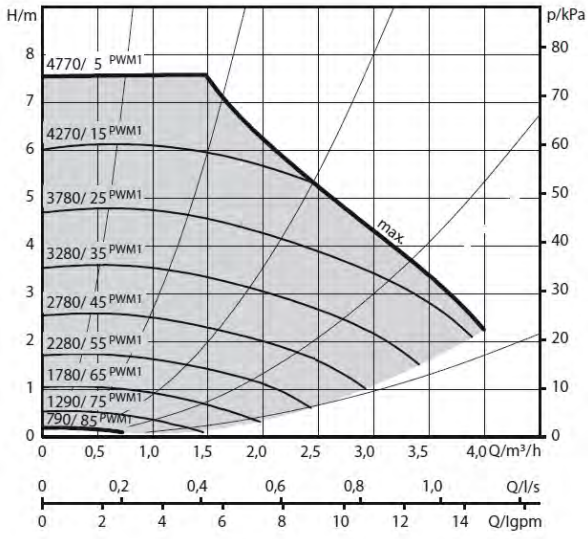

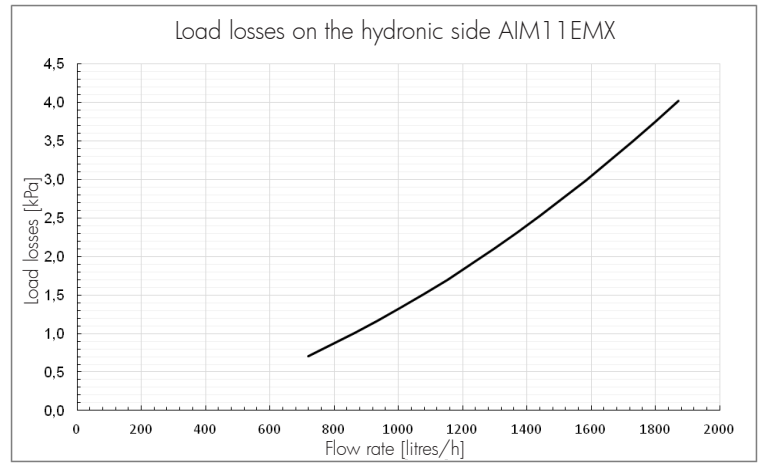

AIM14 EMX 3PH data sheet

improve your life

Ideal for commercial buildings or spacious individual households

With a 14-kW heating and cooling capacity, this is the ideal unit to build heating and cooling hydronic systems for use in large individual households and office buildings. Available in the three-phase and single-phase version, this unit can be connected to the EMIX or EMIX TANK to produce domestic hot water directly from the thermodynamic source, using heat recovery during air-conditioning mode in the summer.

A | A++ | EC PUMP | ELECTRIC BACK UP | iCOP | A2W

Data based on the EN 14511-3:2013 standard

Heating

LWT [°C]	Outdoor air temperature - Dry Bulb (Wet Bulb) - °C									
	-7 (-8)		-2 (-3)		2 (1)		7 (6)		12 (11)	
	Qh [kW]	COP	Qh [kW]	COP	Qh [kW]	COP	Qh [kW]	COP	Qh [kW]	COP
35	**9.10**	**2.50**	**9.35**	**2.60**	**9.74**	**3.10**	**13.50**	**4.05**	**14.53**	**4.50**
45	**8.55**	**2.31**	**9.06**	**2.28**	**9.54**	**2.61**	**12.80**	**3.25**	**13.64**	**3.37**
55	**8.30**	**1.75**	**8.54**	**1.93**	**8.68**	**2.02**	**10.80**	**2.34**	**11.59**	**2.41**

LWT: Leaving water temperature
Qh: Heat capacity
COP: Coefficient of performance

Application data
Water inlet/outlet temperature difference = 5 °C, 8 °C for LWT = 55 °C

Cooling

LWT [°C]	Inlet outdoor air temperature - °C	
	35	
	Qc [kW]	EER
7	**8.30**	**2.26**
18	**10.00**	**3.50**

LWT: Leaving water temperature
Qc: Cooling capacity
EER: Energy efficiency ratio

Application data
Water inlet/outlet temperature difference = 5 °C

AIM14 EMX 3PH data sheet

OUTDOOR UNIT				AIM14EMX3PH	
Matchable units for Domestic Hot Water (DWH) production				EMIX TANK V2 (200-300 liters)	
				EMIX V1 + External Tank	
				External Tank + 3-way valve	
				Cooling	Heating
Performance according to EN 14511	Air +35°C - Water 23/18°C Air + 7°C - Water 30/35°C	Nominal-max. Cooling/Heating capacity	kW	10.00-11.90	13.60-15.50
		Nominal electric power input	kW_{el}	2.91	3.33
		Nominal EER/COP		3.44	4.05
	Air +35°C - Water 12/7°C Air - 7°C - Water 30/35 °C	Nominal-max. Cooling/Heating capacity	kW	8.30-9.60	8.70
		Nominal electric power input	kW_{el}	3.56	3.50
		Nominal EER/COP		2.32	2.49
Performance according to ERP Ecodesign EN 14825	LOW TEMPERATURE AVERAGE season	Nominal Heating capacity	kW	13.00	
		Seasonal energy efficiency ηs	%	154	
		SCOP		3.93	
		Energy efficiency class		A++	
	MEDIUM TEMPERATURE AVERAGE season	Nominal Heating capacity	kW	11.00	
		Seasonal energy efficiency ηs	%	112	
		SCOP		2.87	
		Energy efficiency class		A+	
DHW Performance according to EN 16147	With 300L tank and diverting valve	Load profile		XL	
		Energy efficiency class		A	
		DHW COP		2.12	
		ERP efficiency	%	85	
		Heating-up time from 10°C to 47°C	h:m	2:40	
	With Emix Tank 300 V2	Load profile		XL	
		Energy efficiency class		A	
		DHW COP		2.51	
		ERP efficiency	%	105	
		Heating-up time from 10°C to 48°C	h:m	2:24	
Unit operation data		Maximum outlet water temperature	°C	Up to 58	
		Outdoor temperature range (heating)	°C	-20 / +35	
		Outdoor temperature range (cooling)	°C	+10 / +47	
		Nominal water flow rate	m^3/h	at 35 °C	2.31
				at 45 °C	2.18
				at 55 °C	1.16
		Minimum efficient water volume of the system	l	80	
		Power supply (Voltage/Phases/Frequency)	V/Ph/Hz	400/3+N+T/50	
		Maximum electric consumption	kW/A	/ 5.30	
		Fuse		10 A	
		Sound pressure	dB(A)	49	
Components and dimensions		Expansion vessel	l	6	
		Maximum pump pressure	m_{H2O}	7.5 (see H/Q diagrams)	
		Water connections	inch (")	1"	
		Safety valve	bar	3	
		Weight	kg	160	
		Dimensions H/W/D	mm	1335/1270/450	
		Compressor type		Twin Rotary	
Refrigerant pipes to EMIX/EMIX TANK		Diameters (gas/liquid)	inch (")	1/2"	
		Maximum length	m	10	
		Minimum length	m	5	
		Max height difference IU-OU	m	10	
Refrigerant		Type and GWP		R410A / 2088 kg CO_2 eq.	
		Standard charge	kg	3.10 kg / 6.47 Tons CO2 eq.	

*Single-phase version available within this year

The equipment described in this catalogue contains HFC-410A-type fluorinated greenhouse gases. These products must be fitted by qualified staff pursuant to European regulations 303/2008 and 517/2014. PRELIMINARY data declared in accordance with REGULATION (EU) No 811/2013 of 18 February 2013 with regard to the energy labelling of space heaters, combination heaters, packages of space heater, temperature control and solar device and packages of combination heater, temperature control and solar devices, packages of combination heater, temperature control and solar devices, and with COMMISSION REGULATION (EU) No 813/2013 of 2 August 2013 implementing Directive 2009/125/EC of the European Parliament and of the Council with regard to ecodesign requirements for space heaters and combination heaters. Argoclima reserves the right to amend the data presented in this catalogue at any time and without notice.

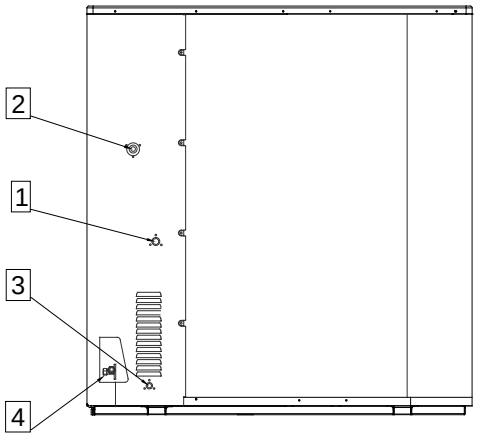

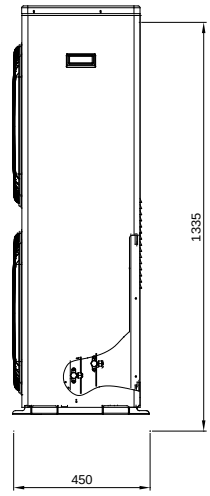

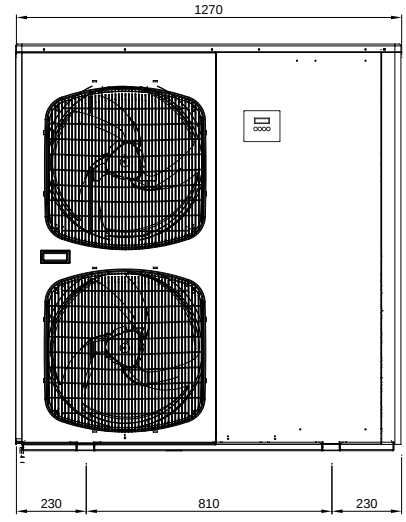

1. 1" M water inlet
2. 1" M water outlet
3. 1/2" M refilling/draining water circuit
4. Inlet/outlet of refrigerant pipes for EMIX

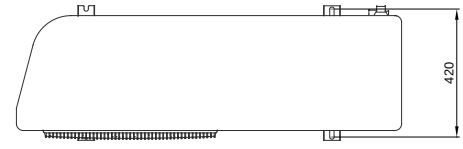

Characteristic curve of the pump and load losses in the unit

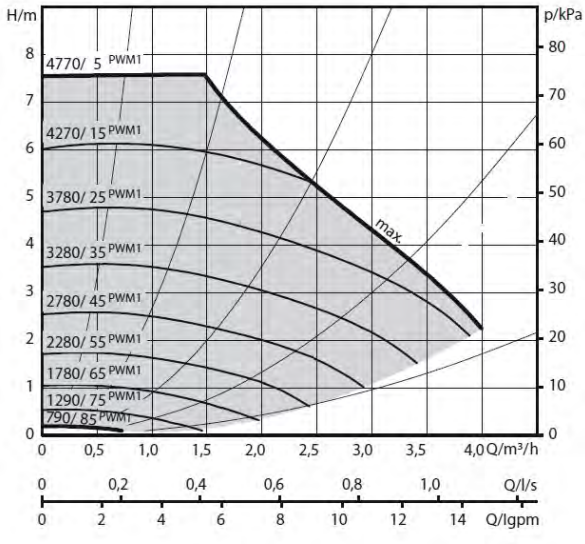

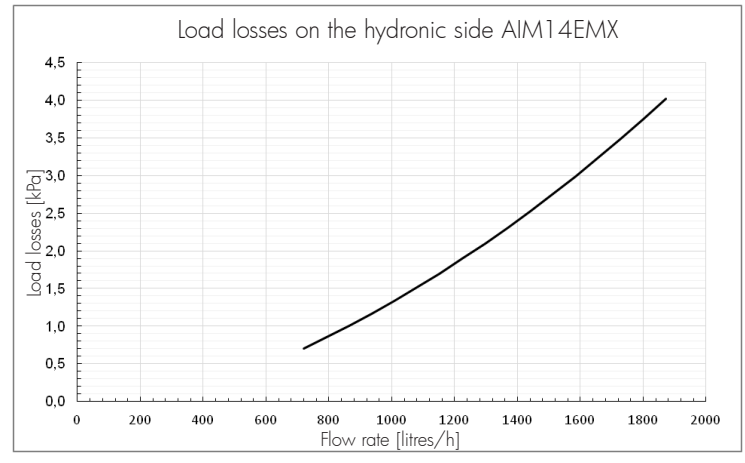

iSERIES™

The mixed system - air/air and air/water SPLIT heat pumps

argo

improve your life

Renewable energy systems for maximum comfort

iSERIES™

With iSERIES, you can build your dream home with:
- Heating and cooling of rooms with fan coils, direct-expansion units or using a combination of both
- Domestic hot water production with high-efficiency systems and energy recovery capability (EMIX and EMIX TANK models)
- Domestic hot water production with 3-way valve and DHW tank

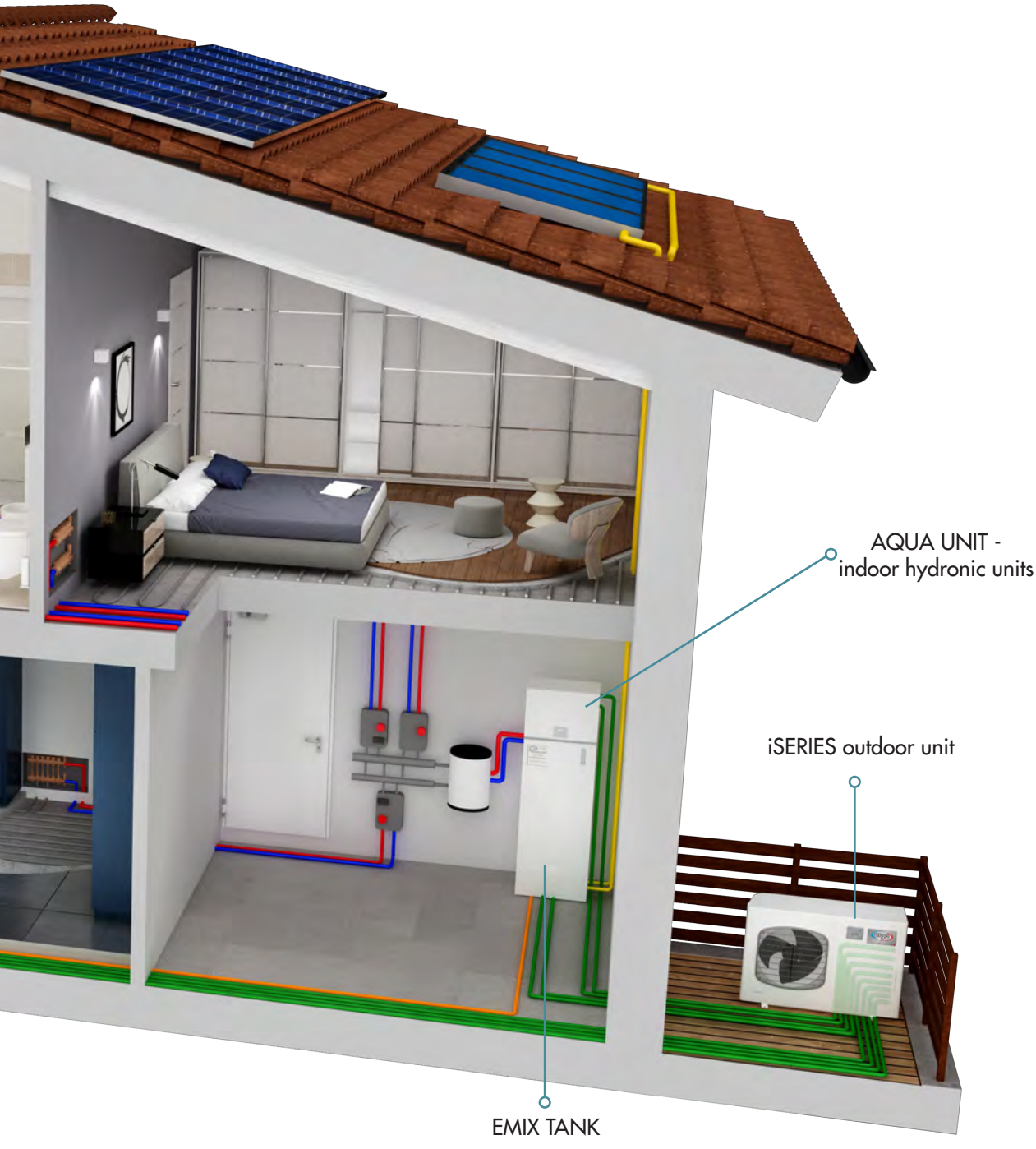
AQUA UNIT -
indoor hydronic units
iSERIES outdoor unit
EMIX TANK

iSERIES - the advantages

UNIQUE AND INNOVATIVE

iSERIES is the only system capable of producing domestic hot water at the same time as heating and cooling rooms, thanks to its special refrigerant gas connection. In addition, as the indoor spaces are being cooled, water is heated free of charge using EMIX and EMIX TANK heat recovery technology.

EFFICIENT AND SILENT

The iSERIES outdoor unit is a FULL DC INVERTER heat pump equipped with a compressor and fans, strictly inverters, to guarantee maximum efficiency and low energy consumption. The use of latest-generation soundproofing material and the ability of the electronics to intelligently control the compressor cycle guarantee a low running noise.

HIGH PERFORMANCE AND SAVINGS

iSERIES achieves an energy efficiency class A++ for heating and A, with an XL load profile, for domestic hot water production, ensuring comfort and energy savings.
It can be combined to other renewable energies (solar thermal energy systems and photovoltaic systems).

AQUA UNIT - the advantages

EVERYTHING UNDER CONTROL

AQUA UNIT has everything under control; it is equipped with temperature and water flow rate control systems that can optimise the system operation and ensure a high level of efficiency.

SIMPLE AND INTUITIVE INTERFACE

Featuring an LCD display, the control panel is easy to use, both for operators (fitters and Service Centres) and for end users.

OPEN AND FLEXIBLE

AQUA UNIT is open, which means it is compatible with third-party and advanced control systems. Its flexibility enables it to integrate the available heat output when the outdoor environmental conditions are particularly demanding.

iSERIES - the advantages

Relative humidity sensor

The addition of a relative humidity sensor in the direct-expansion indoor units allows the user to choose between the cooling mode and dehumidification mode, based on the relative humidity value (%). If this value exceeds a given threshold, the unit will run in dehumidification mode. Alternatively, the unit will operate in cooling mode or with alternating cooling and dehumidification cycles. The reference set-point for the room relative humidity is 50%.

The signal emitted by this sensor is also used by the control software, which takes account of the relative humidity of the room in which the unit is installed in relation to the temperature measured by the air sensor.
This gives rise to the HUMIDEX index that measures the temperature perceived by the human body (which is a combination of these two factors) and, as a result, adjusts the set-point to optimise the user's comfort.

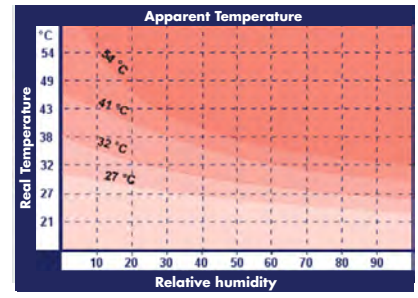

The titanium dioxide photocatalytic filter

Some of the direct-expansion indoor units are equipped with an active photocatalytic filter, in addition to the classic net filter. Photocatalytic filters operate based on a photocatalyst that is usually a semiconductor, whereby sunlight or light emitted by an ultraviolet lamp polarises the electrons in the valence shell, generating movement between each of the atoms (surface electric current).
The electron holes (the spaces left unoccupied by an electron that has moved) have such a high oxidising power that they can oxidise most of the organic contaminants, producing water vapour and carbon dioxide. This makes this type of filter particularly suitable for eliminating bacteria and preventing virus activity. It also effectively reduces dust and dirt particles and helps to prevent unpleasant odours.

How this technology is applied to the iSERIES indoor units

Titanium dioxide is a photocatalyst semiconductor that presents itself in the form of a milky solution that is deposited on the material used for the purpose: in our case, this is a beehive filter, which is very similar to the active carbon filter. The air intake from the indoor unit passes through this filter. The filter is enabled by the light from a UV lamp or from a special LED lamp that emits ultraviolet light, which is fitted inside the unit.

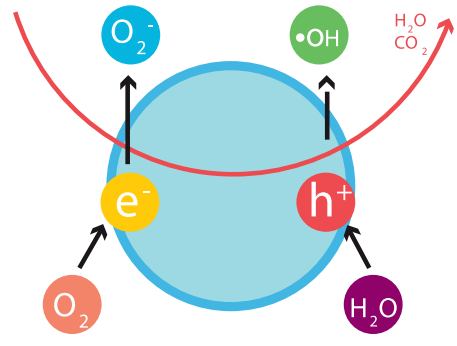

Inputs and outputs of AQUA UNIT

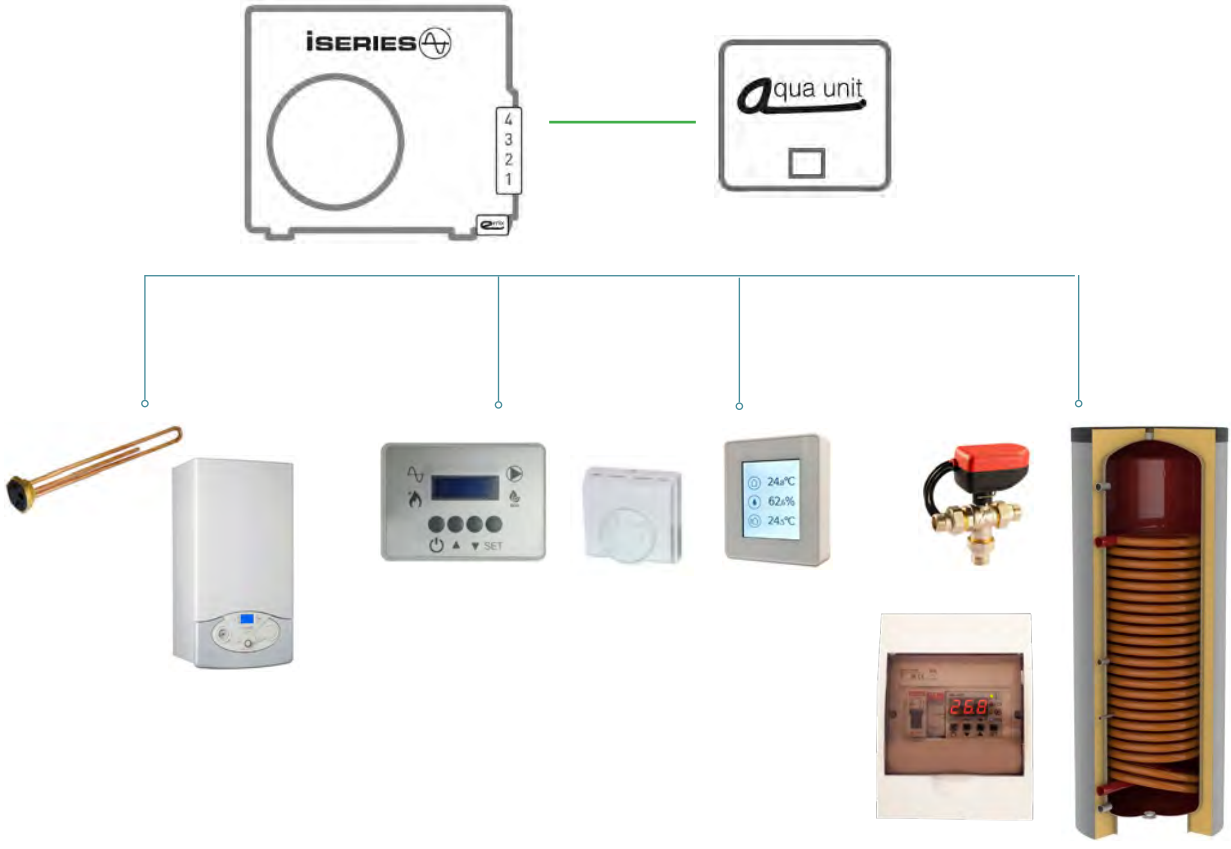

No. 4 DIGITAL INPUTS (dry contacts or configurable 24 VAC contacts)

1) ON/OFF: stand by or operating;
2) Summer/Winter: summer/winter switching;
3) DHW SET POINT or SECOND SET POINT;
4) ECO MODE: if the contact is open, the maximum usable electric power is 100%; if it's closed it can be set with a parameter which is a percentage of the maximum value.

No. 4 DIGITAL OUTPUTS

1) 230 VAC output for the DHW diverter valve servomotor (deviation towards DHW);
2) 230 VAC output for the DHW diverter valve servomotor (re-deviation towards system - optional);
3) 230 VAC output for ALARM/DEFROST/DHW PRODUCTION which can be configured individually or in combination;
4) 230 VAC output for additional element (electric heating element and boiler, etc.) through external relay switch if required.

No. 2 ANALOGUE INPUTS

1) Analogue input 0-10 V for external regulator or advanced room thermostat;
2) Input for additional external air sensor: installation of a second external air sensor to read the temperature in a more suitable position (if required). Automatic recognition of the unit.

iSERIES - main features

How iSERIES works

iSERIES is a system integrated into a heat hump that enables:

- heating
- cooling
- production of domestic hot water

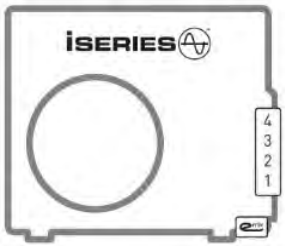

What makes iSERIES unique is that it has both an outdoor unit and corresponding indoor units within the same system, which can exchange energy, either with the hydronic terminals or directly with the ambient air.

iSERIES combines two different technologies:

- Direct-expansion technology (Single and multi-split).
- Technology for heat exchange with water (radiant systems, fan coil units, radiators).

A2A

A2W

By adding specific indoor units, such as EMIX or EMIX TANK, domestic hot water can be produced at the same time as heating or cooling rooms and during heat recovery in cooling mode during the summer.

What you can build with iSERIES

With iSERIES you can create a vast range of system solutions to meet all kinds of needs, be it for residential or small-scale commercial use.
By way of example, some of the possible and versatile combinations of indoor/outdoor units are listed below.

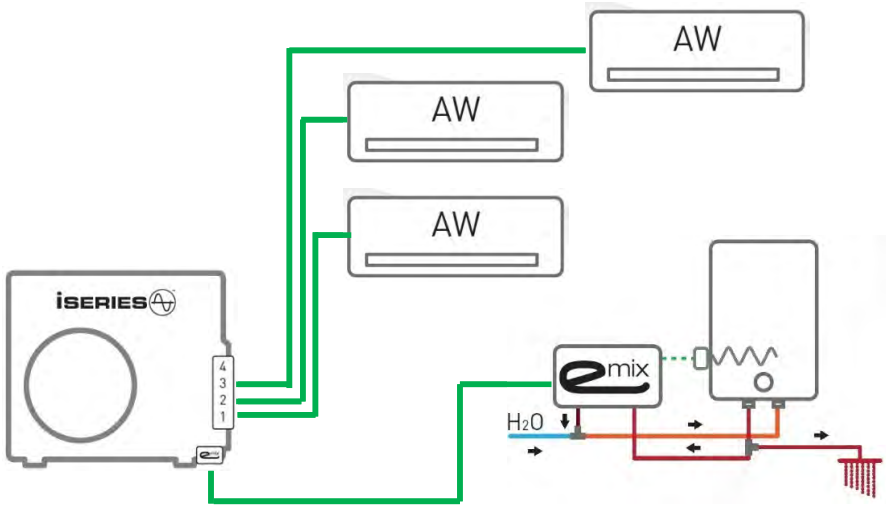

1 Multi-split system for residential installations with DHW production

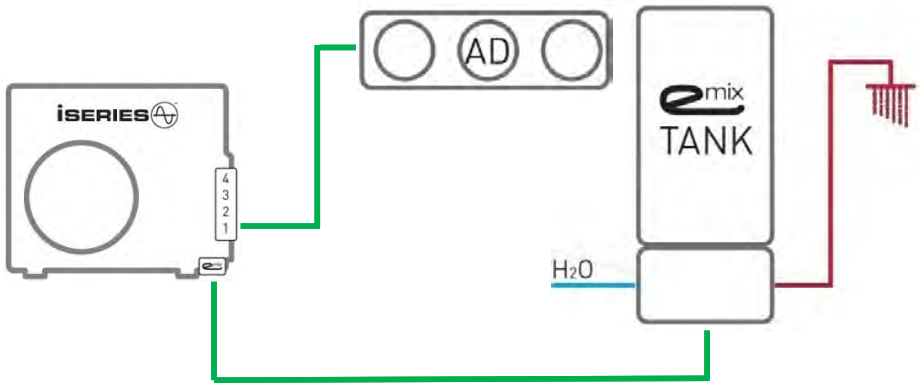

2 Single-split system with DHW production

iSERIES - main features

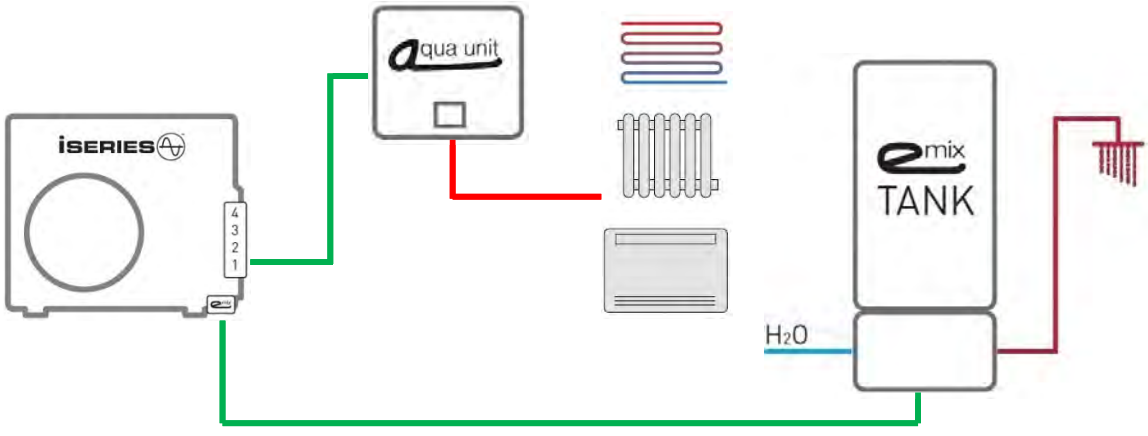

3

Hydronic system with DHW production

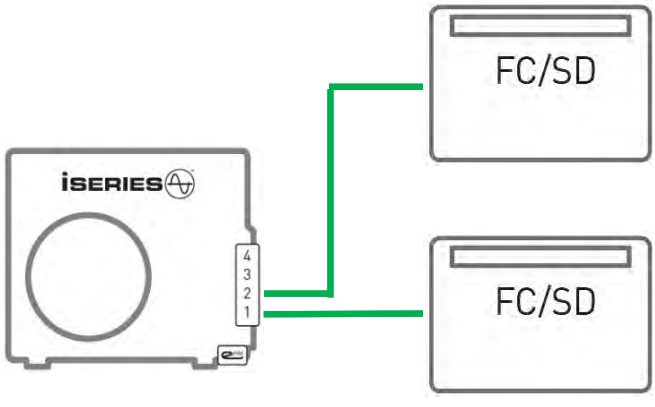

4

Single/multi-split system for computer rooms

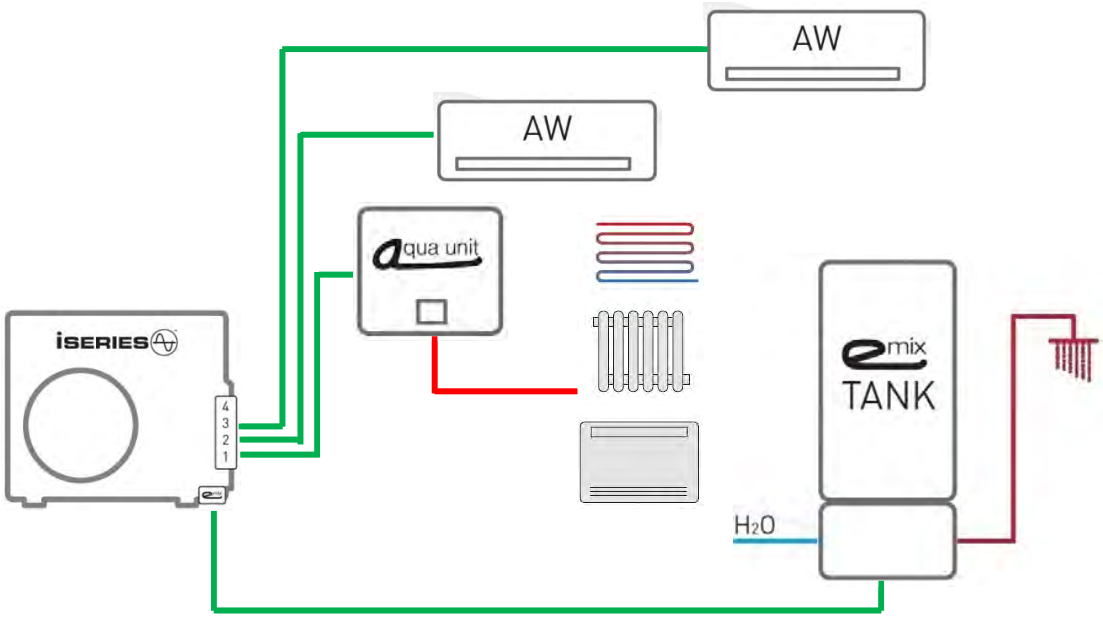

5 Hydronic and multi-split system with DHW production

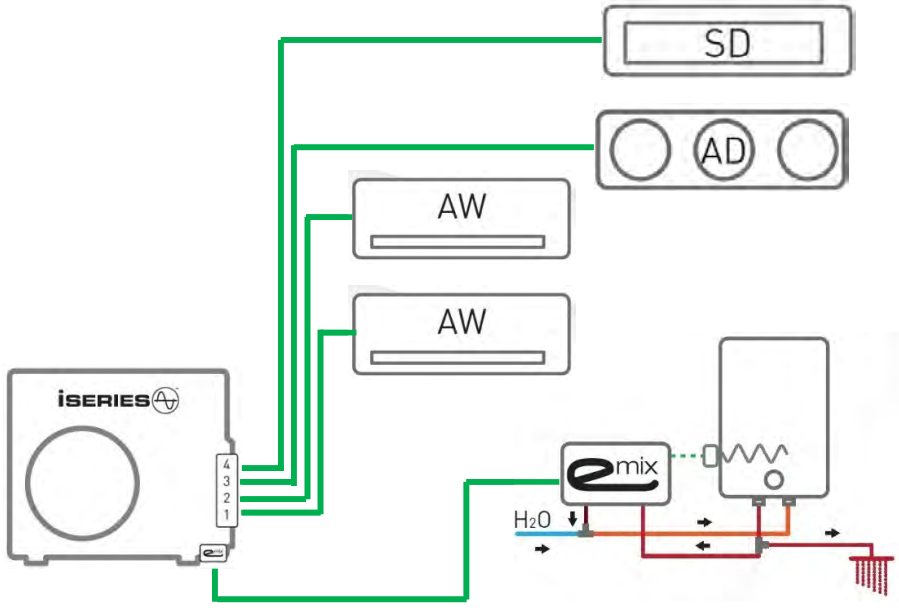

6 Multi-split system for commercial installations with DHW production

iSERIES - system configurations

Outdoor units - sizes and capacity

The graph below shows the nominal heat/cooling capacity of iSERIES indoor units.
Four reference sizes were defined based on the different output values, labelled A, B, C and D respectively. For example, a size-A indoor unit represents a nominal heat capacity of 3.9 kW and a cooling capacity of 3.7 kW.

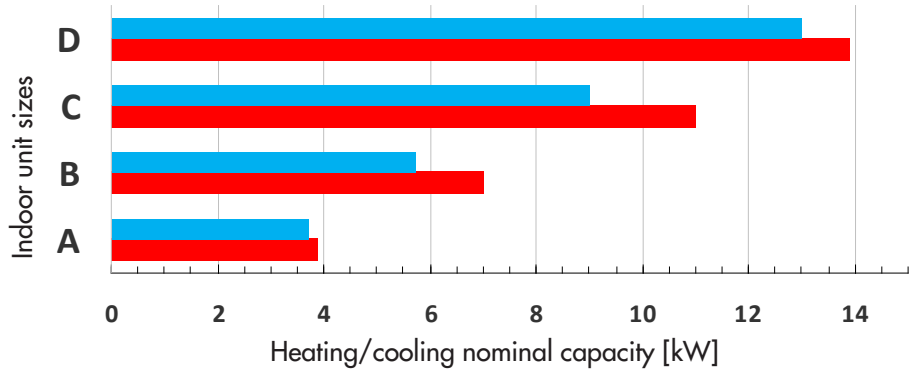

Outdoor units - sizes and capacity

Giving each indoor unit a size makes it quick and easy to work out the corresponding outdoor unit that it can be linked up to, based on a specific series of combinations between indoor units/outdoor units, so as to ensure that the system operates correctly, in line with the now widely used multi-split systems.
Linking up indoor units/outdoor units naturally depends on the capacity of these units, as summarised in the graph below (for more specific data, please refer to individual data sheets).

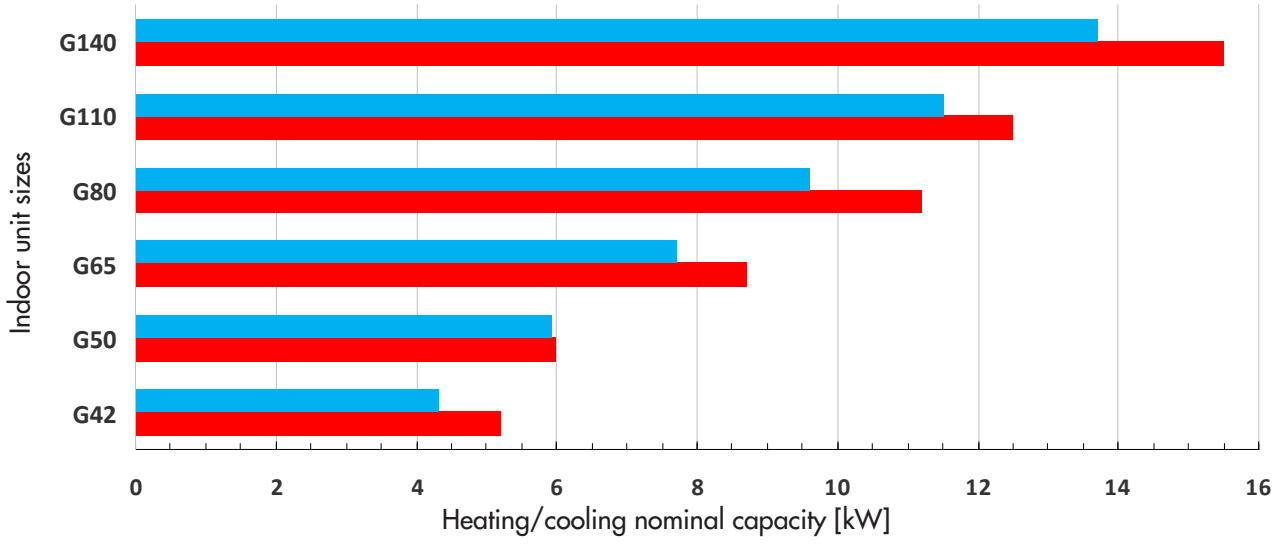

Cooling capacity
Heat capacity

The values presented are based on the following operating conditions:
- A2A heating: t outside air = 7 °C, t ambient air = 20 °C
- A2A cooling: t outside air = 35 °C, t ambient air = 27 °C

iSERIES - possible combinations

System configuration	A2W	A2A / A2W	A2A
Model	**AEI 1G42 EMX**		
			A • B A + A
Model	**AEI 1G50 EMX**		
	AUAH AUAH •	AUAH + A •	A • B • A + A A + B
Model	**AEI 1G65 EMX / EMX 3PH**		
	AUBH AUBH •	AUBH + A + A • AUBH + B •	B • A + A • A + B • A + A + A
Model	**AEI 1G80 BEMX / EMX 3PH**		
	AUCH AUCH •	AUAH + A + A + A • AUAH + A + B • AUBH + A + A + A • AUBH + A + B • AUCH + A + A •	C • A + B • B + B A + A + A • A + A + B • A + A + A + A
Model	**AEI 1G110 BEMX / EMX 3PH**		
	AUCH AUCH •	AUBH + A + A + A • AUBH + A + A + B • AUBH + B + B • AUCH + A +A + A • AUCH + A + B •	D • A + C • A + B • B + B • A + A + A • A + A + B • A + B + B A + A + A + A • A + A + A + B
Model	**AEI 1G140 EMX 3PH**		
	AUDH AUDH •	AUCH + A + A + A • AUCH + A + A + B • AUCH + A + A + A + A • AUCH + A + A + A + B • AUCH + B + B • AUDH + A + B • AUDH + A + A + A •	A + D • B + C • B + D C + C A + A + D A + A + C • A + A + A + C A + A + A + A • A + A + A + B • A + A + A + A + A • A + A + A + A + B

● With EMIX/EMIX TANK

● Mixed configuration: air/air for cooling and air/water for heating

SIMULTANEOUS OPERATION IS NOT POSSIBLE

iSERIES - possible combinations and practical examples

The product information sheet for each outdoor unit lists the combinations that can be used when designing systems with iSERIES. By way of example, the combinations that can be made with the AEI1 G80 EMX outdoor unit and the corresponding system diagrams are shown below.

1 Combination

G80 outdoor unit in winter mode with size B hydronic module (AUBH) and in summer mode with two size A and size B direct-expansion units. Domestic hot water production with EMIX TANK.

A2W	A2A / A2W •	A2A
AUCH	AUAH+A+A+A •	C •
AUCH •	AUAH+A+B •	A+B •
	AUBH+A+A+A •	B+B
	AUBH+A+B •	A+A+A •
	AUCH+A+A •	A+A+B •
		A+A+A+A

- With EMIX/EMIX TANK
- Mixed configuration: air/air for cooling and air/water for heating

SIMULTANEOUS OPERATION IS NOT POSSIBLE

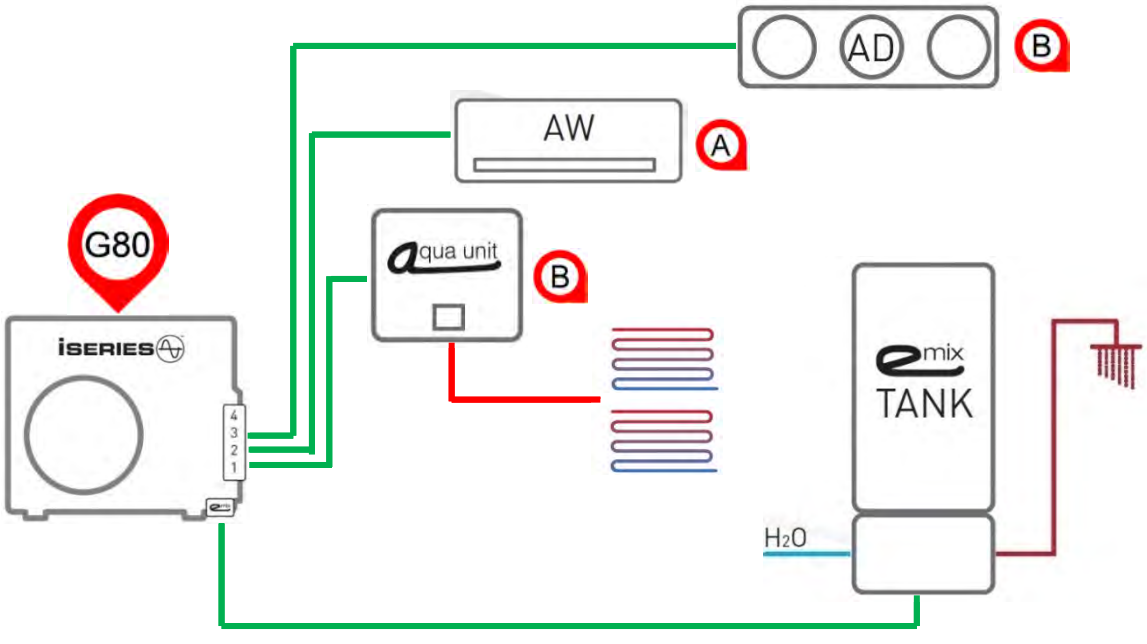

2 Combination

G80 outdoor unit in summer/winter mode with three size A direct-expansion units. Domestic hot water production with EMIX.

A2W	A2A / A2W •	A2A
AUCH	AUAH+A+A+A •	C •
AUCH •	AUAH+A+B •	A+B •
	AUBH+A+A+A •	B+B
	AUBH+A+B •	A+A+A •
	AUCH+A+A •	A+A+B •
		A+A+A+A

- With EMIX/EMIX TANK
- Mixed configuration: air/air for cooling and air/water for heating

SIMULTANEOUS OPERATION IS NOT POSSIBLE

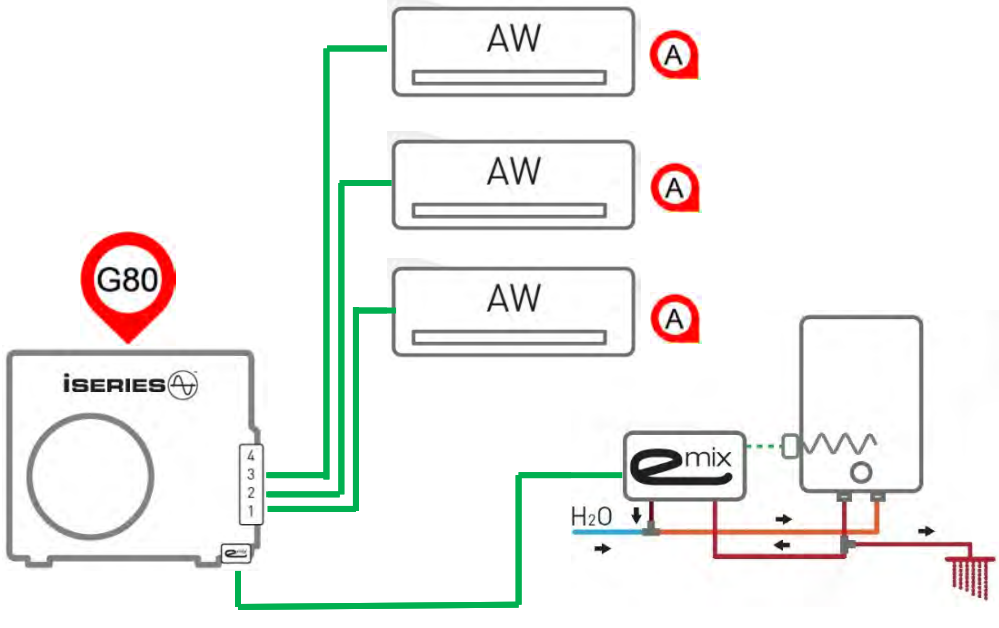

iSERIES - possible combinations and practical examples

3 Combination

G80 outdoor unit in winter mode (and possibly summer mode) with size C hydronic module (AUCH). Domestic hot water production with EMIX TANK.

A2W	A2A / A2W •	A2A
AUCH	AUAH+A+A+A •	C •
AUCH •	AUAH+A+B •	A+B •
	AUBH+A+A+A •	B+B
	AUBH+A+B •	A+A+A •
	AUCH+A+A •	A+A+B •
		A+A+A+A

- With EMIX/EMIX TANK
- Mixed configuration: air/air for cooling and air/water for heating

SIMULTANEOUS OPERATION IS NOT POSSIBLE

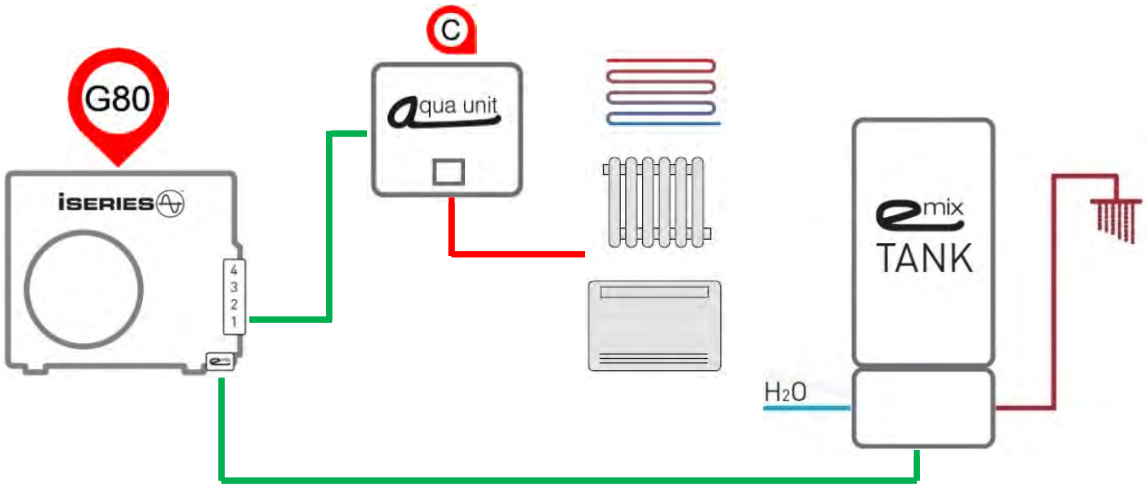

4 Combination

G80 outdoor unit in winter mode (and possibly summer mode) with one only size C hydronic module (AUCH). Domestic hot water production with diverter valve and third-party tank.

A2W	A2A / A2W •	A2A
AUCH	AUAH+A+A+A •	C •
AUCH •	AUAH+A+B •	A+B •
	AUBH+A+A+A •	B+B
	AUBH+A+B •	A+A+A •
	AUCH+A+A •	A+A+B •
		A+A+A+A

- With EMIX/EMIX TANK
- Mixed configuration: air/air for cooling and air/water for heating

SIMULTANEOUS OPERATION IS NOT POSSIBLE

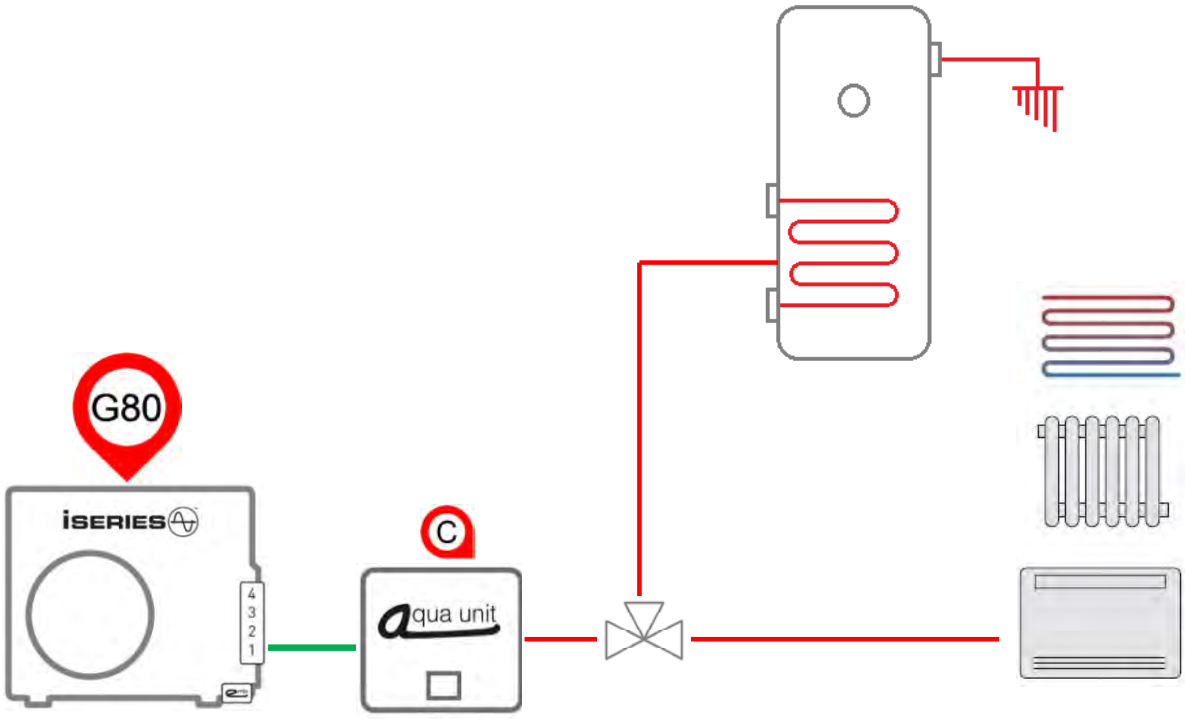

iSERIES - refrigerant pipe lengths

For the iSERIES system to operate correctly, the refrigerant gas lines must adhere to the sizes and height differences shown in the table on the next page.

How to perform a proper check?

1 Choose the configuration for the outdoor unit based on the number of indoor units to be fitted (include AQUA UNIT and EMIX/EMIX TANK).

2 Check that the total length of the pipes (tot L) is less than or equal to the reference length listed in the table in the STANDARD CHARGE column. If the restriction is not adhered to, carry out a further check using the values shown in the ADDITIONAL CHARGE column. In this instance, an additional refrigerant charge calculated following the guidelines specified on the next pages should be provided.

3 Similarly, check that the maximum length of each pipe (Ln) falls within the restrictions set.

4 Check the limits set for the minimum length, the maximum height difference between the indoor units and the maximum height difference between the indoor units and outdoor unit (including AQUA UNIT and EMIX/EMIX TANK).

5 Pay close attention to length L6 in the diagram which represents the length of the EMIX/EMIX TANK pipe: the maximum length allowed is **10 m**.

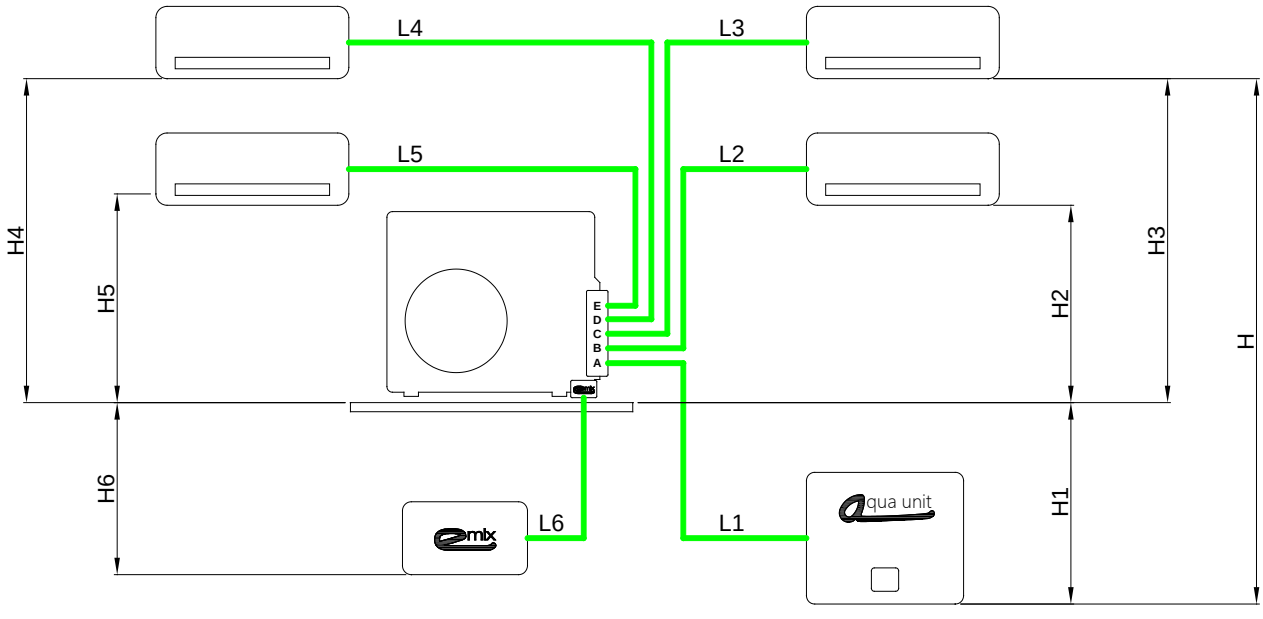

Table showing data for refrigerant gas pipe lengths

	Configuration	STANDARD CHARGE		ADDITIONAL CHARGE		MINIMAL LENGHT
		L tot [m]	L n (m)	L tot [m]	L n (m)	L min [m]
AEI 1G30 EMX	*Single*			15		5
AEI 1G42 EMX	*Single*	7.5	-	20	-	5
	Dual	15	12	30	25	5
AEI 1G50 EMX	*Single*	7.5	-	20	-	5
	Dual	15	12	30	25	5
AEI 1G65 EMX AEI 1G65 EMX 3PH	*Single*	20	-	35	-	5
	Dual	30	25	45	30	5
	Tri	30	20	45	25	5
AEI 1G80 BEMX AEI 1G80 EMX 3PH	*Single*	30	-	50	-	5
	Dual	40	30	65	30	5
	Tri	40	30	65	30	5
	Quad	40	30	65	30	5
AEI 1G110 BEMX AEI 1G110 EMX 3PH	*Single*	30	-	50	-	5
	Dual	40	30	65	30	5
	Tri	40	30	65	30	5
	Quad	40	30	65	30	5
AEI 1G140 EMX 3PH	*Single*	40	-	50	-	5
	Dual	40	30	100	30	5
	Tri	40	30	100	30	5
	Quad	40	30	100	30	5
	Penta	40	30	100	30	5

L tot = Maximum total pipe lenght (L1 + L2 + L3...)
L n = Maximum pipe lenght for unit (n= 1,2,3...)

Additional gas charge
For pipes 1/4 " - 3/8" = 15g/m
For pipes1/4 " - 1/2" = 20g/m
For Emix pipes (3/8") = 15g/m

Maximum height difference - outdoor unit /indoor unit: 10m (H1, H2, H3, H4, H5, H6)
Maximum height difference between indoor units: 5m (H)

Operating limits

- Maximum conditions in Cooling Mode
  Outdoor temperature: 43 °C DB
  Indoor temperature: 32 °C DB /23 °C WB
- Minimum conditions in Cooling Mode
  Outdoor temperature: -15 °C DB
  Indoor temperature: 10 °C DB /6 °C WB
- Maximum conditions in Heating Mode
  Outdoor temperature: 24 °C DB /18 °C WB
  Indoor temperature: 27 °C DB
- Minimum conditions in Heating Mode
  Outdoor temperature: -20 °C DB
  Indoor temperature: 5 °C DB

The operating limits shown in the technical manuals relate to the standard (EN 14511).

iSERIES™

Full DC Inverter outdoor units

argo

improve your life

AEI 1G42 EMX data sheet

Versatile, single and dual

Outdoor unit that can be connected to any size A and B air/air indoor unit, in a single or dual configuration. It is also possible to connect at the same time a size A or B indoor unit with an EMIX or EMIX TANK (via a specific port) for domestic hot water production from a thermodynamic source.

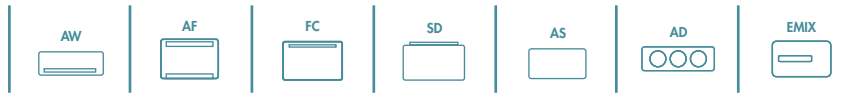

Possible combinations with indoor units (sizes)

A2W	A2A / A2W ●	A2A
-	-	A ●
-	-	B
-	-	A+A

● With EMIX/EMIX TANK
● Mixed configuration: air/air for cooling and air/water for heating

SIMULTANEOUS OPERATION IS NOT POSSIBLE

Data based on the UNI/TS 11300-4:2012 standard

Heating

LAT [°C]	Outdoor air temperature - Dry Bulb (Wet Bulb) - °C									
	-10 (-11)		-7 (-8)		2 (1)		7 (6)		12 (11)	
	Qh [kW]	COP	Qh [kW]	COP	Qh [kW]	COP	Qh [kW]	COP	Qh [kW]	COP
20	**2.90**	**2.12**	**3.00**	**3.36**	**2.80**	**2.44**	**5.20**	**3.62**	**5.80**	**3.92**

LAT: Leaving air temperature
Qh: Heat capacity
COP: Coefficient of performance

Cooling

LAT [°C]	Inlet outdoor air temperature °C	
	35	
	Qc [kW]	EER
27 (19)	**4.30**	**2.76**

LAT: Leaving air temperature
Qc: Cooling capacity
EER: Energy efficiency ratio

OUTDOOR UNIT				AEI 1G42 EMX	
Matchable units for Domestic Hot Water (DWH) production				EMIX TANK V2 (200-300 liters)	
				EMIX V1 + External Tank	
				External Tank + 3-way valve	
Matchable air/air Indoor units				see technical datasheets	
Matchable air/water Indoor units				NO	
				Cooling	Heating
Performance according to EN 14511	Outdoor air +35°C - Indoor air 27°C Outdoor air + 7°C - Indoor air 20°C	Nominal (min/max) Cooling/Heating capacity	kW	3.51 (1.02 / 4.31)	4.20 (0.94 / 5.15)
		Nominal electric power input	kW_{el}	1.05	0.96
		Nominal EER/COP		3.35	4.38
Performance according to ERP Ecodesign EN 14825	AVERAGE season	Pdesignc/Pdesignh	kW	4.30	3.40
		SEER/SCOP		6.50	4.10
		Energy efficiency class		A++	A+
	DHW production	Load profile		XL	
		ERP class		A	
Unit operation data		Outdoor temperature operating range	°C	-15 / +43	-20 / +24
		Indoor temperature operating range	°C	+10 / +47	+5 / +27
		Power supply (Voltage/Phases/Frequency)	V/Ph/Hz	230/1+T/50-60	
		Maximum electric consumption	kW/A	1.79/7.80	
		Sound pressure	dB(A)	45	
		Sound power	dB(A)	58	
Components and dimensions		Compressor type		Twin Rotary	
		Fan air flow rate	m^3/h	1700	
		Weight	kg	56.4	
		Dimensions H/W/D	mm	630/895/345	
Cooling lines		Diameters (liquid-gas)	inch	1/4"-3/8"(x2) + 3/8"-3/8"(eMIX)	
		Total length of pipes (standard charge)	m	multi 15 / single 7,5	
		Total length of pipes (additional charge)	m	multi 30 / single 20	
		Pipe length per unit (standard charge)	m	12	
		Pipe length per unit (additional charge)	m	25	
		Maximum height difference IU-OU	m	10	
		Maximum height difference IU-IU	m	5	
Refrigerant		Type and GWP		R410A / 2088 kg CO_2 eq.	
		Standard charge		1.3 kg / 2.71 Tons CO_2 eq.	

Notes

The equipment described in this catalogue contains HFC-410A-type fluorinated greenhouse gases. These products must be fitted by qualified staff pursuant to European regulations 303/2008 and 517/2014. PRELIMINARY data declared in accordance with REGULATION (EU) No 811/2013 of 18 February 2013 with regard to the energy labelling of space heaters, combination heaters, packages of space heater, temperature control and solar device and packages of combination heater, temperature control and solar devices, packages of combination heater, temperature control and solar devices, and with COMMISSION REGULATION (EU) No 813/2013 of 2 August 2013 implementing Directive 2009/125/EC of the European Parliament and of the Council with regard to ecodesign requirements for space heaters and combination heaters. Argoclima reserves the right to amend the data presented in this catalogue at any time and without notice.

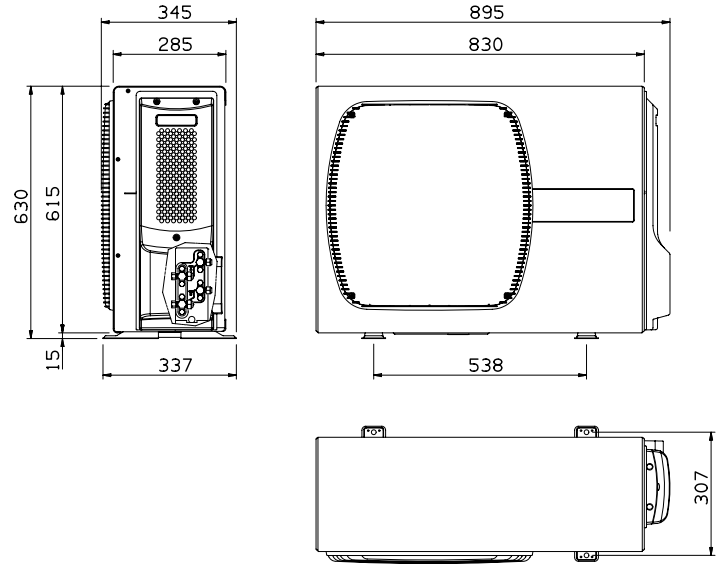

AEI 1G50 EMX data sheet

Multi-functional and ideal for high energy efficient homes

Compact, single and dual outdoor unit, ideal for air/air applications and can also be combined with indoor hydronic units, such as AQUA UNIT, for air/water applications. This kind of unit is even small enough to fit in places with limited space. By using the EMIX port to connect the unit to an EMIX/EMIX TANK, mixed applications can be created to produce domestic hot water at the same time.

Possible combinations with indoor units (sizes)

A2W	A2A / A2W	A2A
AUAH	AUAH+A •	A •
AUAH •		B •
		A+A
		A+B

• With EMIX/EMIX TANK

• Mixed configuration: air/air for cooling and air/water for heating

SIMULTANEOUS OPERATION IS NOT POSSIBLE

OUTDOOR UNIT				AEI1G50 EMX	
Matchable units for Domestic Hot Water (DWH) production				EMIX TANK V2 (200-300 liters)	
				EMIX V1 + External Tank	
				External Tank + 3-way valve	
Matchable air/air Indoor units				see technical datasheets	
Matchable air/water Indoor units				AUAH	
AIR/WATER					
				Cooling	Heating
Performance according to EN 14511	Air +35°C - Water 23/18°C Air + 7°C - Water 30/35°C	Nominal-max. Cooling/Heating capacity	kW	5.30-5.40	4.10-5.57
		Nominal electric power input	kW_{el}	1.44	1.03
		Nominal EER/COP		3.68	4.0
	Air +35°C - Water 12/7°C Air - 7°C - Water 30/35 °C	Nominal Cooling/Heating capacity	kW	3.70	2.50
		Nominal electric power input	kW_{el}	1.55	1.12
		Nominal EER/COP		2.38	2.24
Performance according to ERP Ecodesign EN 14825	LOW TEMPERATURE AVERAGE season	Nominal Heating capacity	kW	3.00	
		Seasonal energy efficiency ηs	%	150	
		SCOP		3.83	
		Energy efficiency class		A++	
AIR/AIR					
				Cooling	Heating
Performance according to EN 14511	Outdoor air +35°C - Indoor air 27°C Outdoor air + 7°C - Indoor air 20°C	Nominal (min.-max) Cooling/Heating capacity	kW	4.92 (0.84 / 5.90)	5.00 (0.95 / 6.00)
		Nominal electric power input	kW_{el}	1.47	1.16
		Nominal EER/COP		3.35	4.29
Performance according to ERP Ecodesign EN 14825	AVERAGE season	Pdesignc/Pdesignh	kW	5.4	4.3
		SEER/COP		6.4	4.0
		Energy efficiency class		A++	A+
DOMESTIC HOT WATER					
DHW Performance according to EN 16147	With 300L tank and diverting valve	Load profile		XL	
		Energy efficiency class		A	
		DHW COP		2.23	
		ERP efficiency	%	90	
	With Emix Tank 200 V2	Load profile		L	
		Energy efficiency class		A	
		DHW COP		2.57	
		ERP efficiency	%	106	
		Heating-up time from 10°C to 50°C	h:m	2:47	
Unit operation data		Outdoor temperature operating range	°C	-15 / +43	-20 / +24
		Indoor temperature operating range	°C	+10 / +47	+5 / +27
		Power supply (Voltage/Phases/Frequency)	V/Ph/Hz	230/1+T/50-60	
		Maximum electric consumption	kW/A	1.79 / 7.80	
		Sound pressure	dB(A)	45	
		Sound power	dB(A)	58	
Components and dimensions		Compressor type		Twin Rotary	
		Fan air flow rate	m^3/h	1700	
		Weight	kg	56.4	
		Dimensions H/W/D	mm	630/895/345	
Cooling lines		Diameters (liquid-gas)	inch	1/4"-3/8"(x2) + 3/8"-3/8"(eMIX)	
		Total length of pipes (standard charge)	m	multi 15 / single 7.5	
		Total length of pipes (additional charge)	m	multi 30 / single 20	
		Pipe length per unit (standard charge)	m	12	
		Pipe length per unit (additional charge)	m	25	
		Maximum height difference IU-OU	m	10	
		Maximum height difference IU-IU	m	5	
Refrigerant		Type and GWP		R410A / 2088 kg CO_2 eq.	
		Standard charge		1.3 kg / 2.71 Tons CO_2 eq.	

Notes

The equipment described in this catalogue contains HFC-410A-type fluorinated greenhouse gases. These products must be fitted by qualified staff pursuant to European regulations 303/2008 and 517/2014. PRELIMINARY data declared in accordance with REGULATION (EU) No 811/2013 of 18 February 2013 with regard to the energy labelling of space heaters, combination heaters, packages of space heater, temperature control and solar device and packages of combination heater, temperature control and solar devices, packages of combination heater, temperature control and solar devices, and with COMMISSION REGULATION (EU) No 813/2013 of 2 August 2013 implementing Directive 2009/125/EC of the European Parliament and of the Council with regard to ecodesign requirements for space heaters and combination heaters. Argoclima reserves the right to amend the data presented in this catalogue at any time and without notice.

AEI 1G50 EMX data sheet

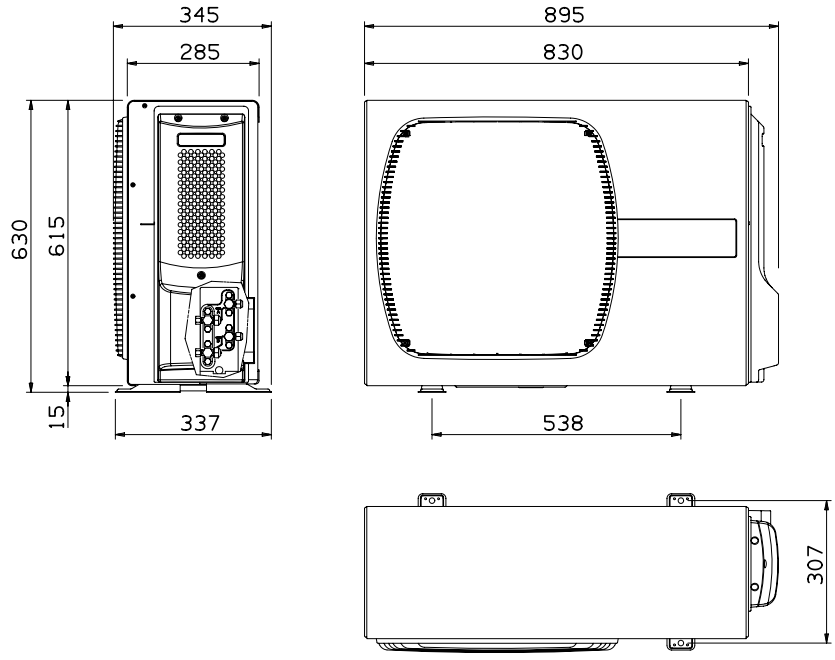

Data based on the UNI/TS 11300-4:2012 standard

Heating

LAT [°C]	Outdoor air temperature - Dry Bulb (Wet Bulb) - °C									
	-10 (-11)		-7 (-8)		2 (1)		7 (6)		12 (11)	
	Qh [kW]	COP	Qh [kW]	COP	Qh [kW]	COP	Qh [kW]	COP	Qh [kW]	COP
20	**3.70**	**2.68**	**3.90**	**2.91**	**3.70**	**2.57**	**6.00**	**3.35**	**6.70**	**3.86**

LAT: Leaving air temperature
Qh: Heat capacity
COP: Coefficient of performance

Cooling

LAT [°C]	Inlet outdoor air temperature °C	
	35	
	Qc [kW]	EER
27 (19)	**5.90**	**3.15**

LAT: Leaving air temperature
Qc: Cooling capacity
EER: Energy efficiency ratio

Data based on the EN 14511-3:2013 standard

Heating

LWT [°C]	Outdoor air temperature - Dry Bulb (Wet Bulb) - °C									
	-7 (-8)		-2 (-3)		2 (1)		7 (6)		12 (11)	
	Qh [kW]	COP	Qh [kW]	COP	Qh [kW]	COP	Qh [kW]	COP	Qh [kW]	COP
35	**2.50**	**2.24**	**2.65**	**2.74**	**3.10**	**3.14**	**4.10**	**4.00**	**4.50**	**4.66**
45	**2.52**	**1.87**	**2.49**	**1.99**	**2.47**	**2.37**	**3.83**	**3.03**	**4.29**	**3.56**
55	**2.51**	**1.75**	**2.39**	**1.79**	**2.31**	**1.80**	**3.80**	**2.37**	**4.01**	**3.01**

LWT: Leaving water temperature
Qh: Heat capacity
COP: Coefficient of performance

Application data
Water inlet/outlet temperature difference = 5 °C, 8 °C for LWT = 55 °C

Cooling

LWT [°C]	Inlet outdoor air temperature °C	
	35	
	Qc [kW]	EER
7	**3.70**	**2.38**
18	**5.30**	**3.68**

LWT: Leaving water temperature
Qc: Cooling capacity
EER: Energy efficiency ratio

Application data
Water inlet/outlet temperature difference = 5 °C

AEI 1G65 EMX/EMX 3PH data sheet

improve your life

Multi-split, single-split package and always DHW

Equipped with 3 connections for single/dual/triple applications with both air/air and air/water configurations, the latter being the best choice for hybrid systems with an average to small output. It meets the requirements of both residential and commercial buildings. By using the EMIX port to connect the unit to an EMIX/EMIX TANK, applications complete with domestic hot water production can be created.
Offers great flexibility in the hybrid air/air with air/water configurations, making it possible to install radiant systems, fan coil units or low-temperature radiators, at the same time as direct-expansion indoor units of any type (wall mounted, floor/ceiling, console, cassette, ductable). The G65 unit is available in both a single-phase and three-phase version.

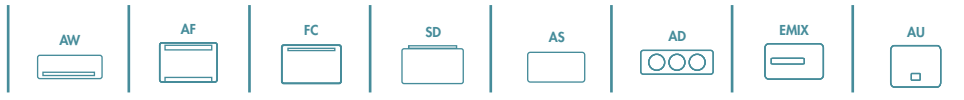

Possible combinations with indoor units (sizes)

A2W	A2A / A2W ●	A2A
AUBH	AUBH+A+A ●	B ●
AUBH ●	AUBH+B ●	A+A ●
		A+B ●
		A+A+A

● With EMIX/EMIX TANK

● Mixed configuration: air/air for cooling and air/water for heating

SIMULTANEOUS OPERATION IS NOT POSSIBLE

AEI 1G65 EMX/EMX 3PH data sheet

OUTDOOR UNIT				AEI1G65 EMX (1ph) AEI1G65EMX 3PH (3ph)	
Matchable units for Domestic Hot Water (DWH) production				EMIX TANK V2 (200-300 liters)	
				EMIX V1 + External Tank	
				External Tank + 3-way valve	
Matchable air/air Indoor units				see technical datasheets	
Matchable air/water Indoor units				AUBH	
AIR/WATER					
				Cooling	Heating
Performance according to EN 14511	Air +35°C - Water 23/18°C Air + 7°C - Water 30/35°C	Nominal-max. Cooling/Heating capacity	kW	5.60-6.10	6.50-8.13
		Nominal electric power input	kW_{el}	1.54	1.56
		Nominal EER/COP		3.64	4.18
	Air +35°C - Water 12/7°C Air - 7°C - Water 30/35 °C	Nominal Cooling/Heating capacity	kW	4.00	5.10
		Nominal electric power input	kW_{el}	1.89	2.01
		Nominal EER/COP		2.12	2.54
Performance according to ERP Ecodesign EN 14825	LOW TEMPERATURE AVERAGE season	Nominal Heating capacity	kW	6.00	
		Seasonal energy efficiency ηs	%	153	
		SCOP		3.90	
		Energy efficiency class		A++	
	MEDIUM TEMPERATURE AVERAGE season	Nominal Heating capacity	kW	5.00	
		Seasonal energy efficiency ηs	%	110	
		SCOP		2.83	
		Energy efficiency class		A+	
AIR/AIR					
				Cooling	Heating
Performance according to EN 14511	Outdoor air +35°C - Indoor air 27°C Outdoor air + 7°C - Indoor air 20°C	Nominal (min.-max) Cooling/Heating capacity	kW	5.75 (1.57 / 7.65)	6.5 (1.82 / 8.67)
		Nominal electric power input	kW_{el}	1.58	1.50
		Nominal EER/COP		3.64	4.32
Performance according to ERP Ecodesign EN 14825	AVERAGE season	Pdesignc/Pdesignh	kW	6.50	6.40
		SEER/COP		6.50	4.00
		Energy efficiency class		A++	A+
DOMESTIC HOT WATER					
DHW Performance according to EN 16147	With 300L tank and diverting valve	Load profile		XL	
		Energy efficiency class		A	
		DHW COP		2.21	
		ERP efficiency	%	90	
	With Emix Tank 200 V2	Load profile		L	
		Energy efficiency class		A	
		DHW COP		2.51	
		ERP efficiency	%	104	
		Heating-up time from 10°C to 50°C	h:m	2:36	
Unit operation data		Outdoor temperature operating range	°C	-15 / +43	-20/ +24
		Indoor temperature operating range	°C	+10 / +47	+5 / +27
		Power supply (Voltage/Phases/Frequency)	V/Ph/Hz	230/1+T/50-60 - 400//3+N+T/50	
		Maximum electric consumption	kW/A	2.80/12.70 (1ph) - 2.80/4.70 (3ph)	
		Sound pressure	dB(A)	45	
		Sound power	dB(A)	64	
Components and dimensions		Compressor type		Twin Rotary	
		Fan air flow rate	m^3/h	2400	
		Weight	kg	64	
		Dimensions H/W/D	mm	735/1030/400	
Cooling lines		Diameters (liquid-gas)	inch	1/4"-3/8"(x2) + 1/4"-1/2" + 3/8"-3/8"(eMIX)	
		Total length of pipes (standard charge)	m	multi 30 /single 20	
		Total length of pipes (additional charge)	m	multi 45 / single 35	
		Pipe length per unit (standard charge)	m	dual 25 / tri 20	
		Pipe length per unit (additional charge)	m	dual 30 / tri 25	
		Maximum height difference IU-OU	m	10	
		Maximum height difference IU-IU	m	5	
Refrigerant		Type and GWP		R410A / 2088 kg CO_2 eq.	
		Standard charge		2.7 kg / 5.63 Tons CO_2 eq.	

Notes

The equipment described in this catalogue contains HFC-410A-type fluorinated greenhouse gases. These products must be fitted by qualified staff pursuant to European regulations 303/2008 and 517/2014. PRELIMINARY data declared in accordance with REGULATION (EU) No 811/2013 of 18 February 2013 with regard to the energy labelling of space heaters, combination heaters, packages of space heater, temperature control and solar device and packages of combination heater, temperature control and solar devices, packages of combination heater, temperature control and solar devices, and with COMMISSION REGULATION (EU) No 813/2013 of 2 August 2013 implementing Directive 2009/125/EC of the European Parliament and of the Council with regard to ecodesign requirements for space heaters and combination heaters. Argoclima reserves the right to amend the data presented in this catalogue at any time and without notice.

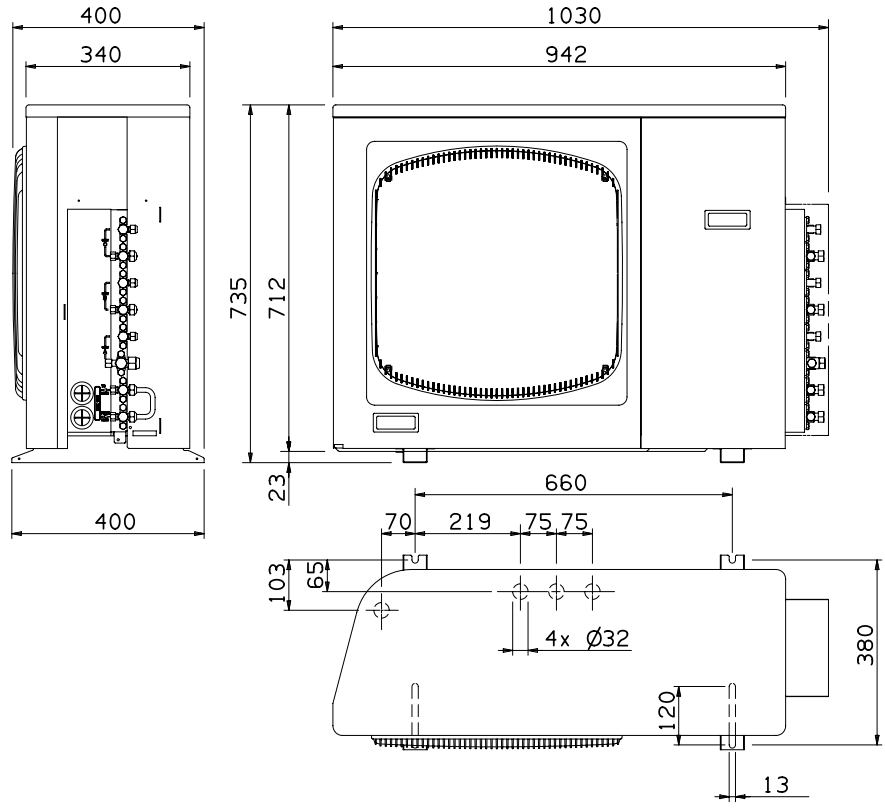

Data based on the UNI/TS 11300-4:2012 standard

Heating

LAT [°C]	Outdoor air temperature - Dry Bulb (Wet Bulb) - °C									
	-10 (-11)		-7 (-8)		2 (1)		7 (6)		12 (11)	
	Qh [kW]	COP	Qh [kW]	COP	Qh [kW]	COP	Qh [kW]	COP	Qh [kW]	COP
20	**5.30**	**2.25**	**5.90**	**3.09**	**5.60**	**2.94**	**8.70**	**3.22**	**9.10**	**3.50**

LAT: Leaving air temperature
Qh: Heat capacity
COP: Coefficient of performance

Cooling

LWT [°C]	Inlet outdoor air temperature °C	
	35	
	Qc [kW]	EER
27 (19)	**7.70**	**3.32**

LAT: Leaving air temperature
Qc: Cooling capacity
EER: Energy efficiency ratio

Data based on the EN 14511-3:2013 standard

Heating

LWT [°C]	Outdoor air temperature - Dry Bulb (Wet Bulb) - °C									
	-7 (-8)		-2 (-3)		2 (1)		7 (6)		12 (11)	
	Qh [kW]	COP	Qh [kW]	COP	Qh [kW]	COP	Qh [kW]	COP	Qh [kW]	COP
35	**5.10**	**2.54**	**5.29**	**2.93**	**5.59**	**3.25**	**6.50**	**4.18**	**7.58**	**4.66**
45	**4.60**	**2.02**	**4.95**	**2.29**	**5.13**	**2.57**	**6.01**	**3.10**	**7.22**	**3.47**
55	**4.00**	**1.59**	**4.19**	**1.54**	**4.26**	**1.86**	**5.00**	**2.31**	**5.95**	**2.70**

LWT: Leaving water temperature
Qh: Heat capacity
COP: Coefficient of performance

Application data
Water inlet/outlet temperature difference = 5 °C, 8 °C for LWT = 55 °C

Cooling

LWT [°C]	Inlet outdoor air temperature °C	
	35	
	Qc [kW]	EER
7	**4.00**	**2.12**
18	**5.60**	**3.64**

LWT: Leaving water temperature
Qc: Cooling capacity
EER: Energy efficiency ratio

Application data
Water inlet/outlet temperature difference = 5 °C

AEI 1G80 BEMX/EMX 3PH data sheet

Extreme flexibility, part way between residential and commercial use

With an unrivalled design for average-sized air/air and air/water hybrid systems, it also allows for the connection of up to 4 indoor units of any type, such as air, water, radiant panels or low-temperature radiators, in a single, dual, triple or quadruple configuration. By using the EMIX port to connect the unit to an EMIX/EMIX TANK, mixed applications can be created to produce domestic hot water at the same time. The G80 unit is available in both a single-phase and three-phase version.

Possible combinations with indoor units (sizes)

A2W	A2A / A2W	A2A
AUCH	AUAH+A+A+A •	C •
AUCH •	AUAH+A+B •	A+B •
	AUBH+A+A+A •	B+B
	AUBH+A+B •	A+A+A •
	AUCH+A+A •	A+A+B •
		A+A+A+A

• With EMIX/EMIX TANK

• Mixed configuration: air/air for cooling and air/water for heating

SIMULTANEOUS OPERATION IS NOT POSSIBLE

OUTDOOR UNIT				AEI1G80 BEMX (1ph) AEI1G80EMX 3PH (3ph)	
Matchable units for Domestic Hot Water (DWH) production				EMIX TANK V2 (200-300 liters)	
				EMIX V1 + External Tank	
				External Tank + 3-way valve	
Matchable air/air Indoor units				see technical datasheets	
Matchable air/water Indoor units				AUCH	
AIR/WATER					
				Cooling	Heating
Performance according to EN 14511	Air +35°C - Water 23/18°C Air + 7°C - Water 30/35°C	Nominal-max. Cooling/Heating capacity	kW	6.90-7.50	8.00-11.06
		Nominal electric power input	kW_{el}	1.89	1.90
		Nominal EER/COP		3.65	4.20
	Air +35°C - Water 12/7°C Air - 7°C - Water 30/35 °C	Nominal Cooling/Heating capacity	kW	4.90	6.30
		Nominal electric power input	kW_{el}	2.30	2.47
		Nominal EER/COP		2.13	2.55
Performance according to ERP Ecodesign EN 14825	LOW TEMPERATURE AVERAGE season	Nominal Heating capacity	kW	7.00	
		Seasonal energy efficiency ηs	%	153	
		SCOP		3.90	
		Energy efficiency class		A++	
	MEDIUM TEMPERATURE AVERAGE season	Nominal Heating capacity	kW	6	
		Seasonal energy efficiency ηs	%	110	
		SCOP		2.83	
		Energy efficiency class		A+	
AIR/AIR					
				Cooling	Heating
Performance according to EN 14511	Outdoor air +35°C - Indoor air 27°C Outdoor air + 7°C - Indoor air 20°C	Nominal (min.-max) Cooling/Heating capacity	kW	6.87 (1.60 / 9.62)	8.00 (1.70/ 11.20)
		Nominal electric power input	kW_{el}	1.86	1.90
		Nominal EER/COP		3.70	4.22
Performance according to ERP Ecodesign EN 14825	AVERAGE season	Pdesignc/Pdesignh	kW	9.00	7.70
		SEER/COP		6.70	4.10
		Energy efficiency class		A++	A+
DOMESTIC HOT WATER					
DHW Performance according to EN 16147	With 300L tank and diverting valve	Load profile		XL	
		Energy efficiency class		A	
		DHW COP		2.23	
		ERP efficiency	%	87	
	With Emix Tank 300 V2	Load profile		XL	
		Energy efficiency class		A	
		DHW COP		2.78	
		ERP efficiency	%	116	
		Heating-up time from 10°C to 48°C	h:m	3:04	
Unit operation data		Outdoor temperature operating range	°C	-15 / +43	-20 / +24
		Indoor temperature operating range	°C	+10 / +47	+5 / +27
		Power supply (Voltage/Phases/Frequency)	V/Ph/Hz	230/1+T/50-60 - 400/3+N+T/50	
		Maximum electric consumption	kW/A	3.50/15.90 (1ph) - 3.50/5.90 (3ph)	
		Sound pressure	dB(A)	45	
		Sound power	dB(A)	64	
Components and dimensions		Compressor type		Twin Rotary	
		Fan air flow rate	m^3/h	3000	
		Weight	kg	87	
		Dimensions H/W/D	mm	835/1190/400	
Cooling lines		Diameters (liquid-gas)	inch	1/4"-3/8"(x3) + 1/4"-1/2" + 3/8"-3/8"(eMIX)	
		Total length of pipes (standard charge)	m	multi 40 / single 30	
		Total length of pipes (additional charge)	m	multi 65 / single 50	
		Pipe length per unit (standard charge)	m	30	
		Pipe length per unit (additional charge)	m	30	
		Maximum height difference IU-OU	m	10	
		Maximum height difference IU-IU	m	5	
Refrigerant		Type and GWP		R410A / 2088 kg CO_2 eq.	
		Standard charge		2.9 kg / 6.05 Tons CO_2 eq.	

Notes

The equipment described in this catalogue contains HFC-410A-type fluorinated greenhouse gases. These products must be fitted by qualified staff pursuant to European regulations 303/2008 and 517/2014.

PRELIMINARY data declared in accordance with REGULATION (EU) No 811/2013 of 18 February 2013 with regard to the energy labelling of space heaters, combination heaters, packages of space heater, temperature control and solar device and packages of combination heater, temperature control and solar devices, packages of combination heater, temperature control and solar devices, and with COMMISSION REGULATION (EU) No 813/2013 of 2 August 2013 implementing Directive 2009/125/EC of the European Parliament and of the Council with regard to ecodesign requirements for space heaters and combination heaters. Argoclima reserves the right to amend the data presented in this catalogue at any time and without notice.

AEI 1G80 BEMX/EMX 3PH data sheet

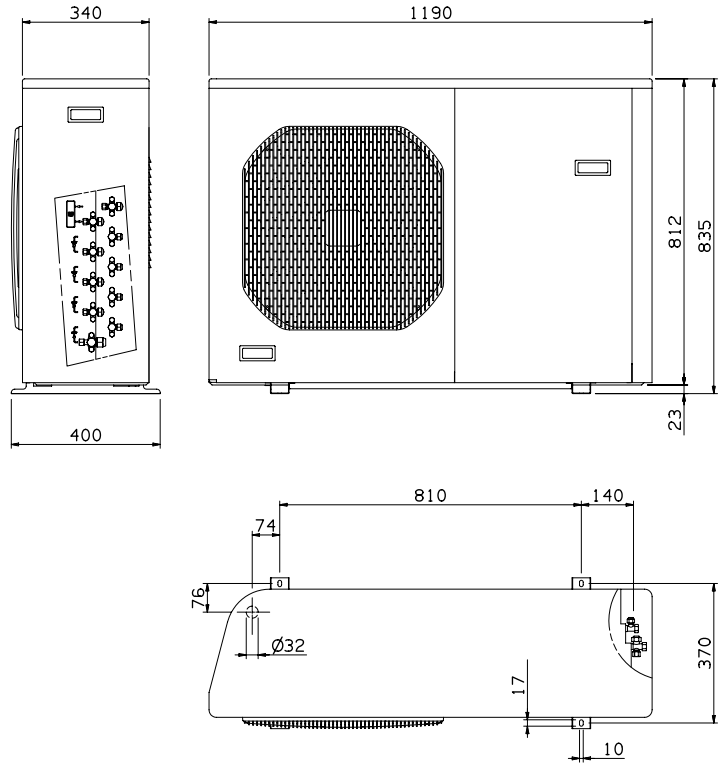

Data based on the UNI/TS 11300-4:2012 standard

Heating

LWT [°C]	Outdoor air temperature - Dry Bulb (Wet Bulb) - °C									
	-10 (-11)		-7 (-8)		2 (1)		7 (6)		12 (11)	
	Qh [kW]	COP	Qh [kW]	COP	Qh [kW]	COP	Qh [kW]	COP	Qh [kW]	COP
20	**6.50**	**2.36**	**6.80**	**2.45**	**6.10**	**2.36**	**11.20**	**3.27**	**11.60**	**3.55**

LAT: Leaving air temperature
Qh: Heat capacity
COP: Coefficient of performance

Cooling

LWT [°C]	Inlet outdoor air temperature °C	
	35	
	Qc [kW]	EER
27 (19)	**9.60**	**3.74**

LAT: Leaving air temperature
Qc: Cooling capacity
EER: Energy efficiency ratio

Data based on the EN 14511-3:2013 standard

Heating

LWT [°C]	Outdoor air temperature - Dry Bulb (Wet Bulb) - °C									
	-7 (-8)		-2 (-3)		2 (1)		7 (6)		12 (11)	
	Qh [kW]	COP	Qh [kW]	COP	Qh [kW]	COP	Qh [kW]	COP	Qh [kW]	COP
35	**6.30**	**2.55**	**6.81**	**2.89**	**7.01**	**3.34**	**8.00**	**4.20**	**11.46**	**4.62**
45	**5.70**	**2.03**	**6.38**	**2.48**	**6.60**	**2.79**	**7.39**	**3.12**	**10.02**	**3.64**
55	**4.90**	**1.60**	**4.99**	**1.99**	**5.27**	**2.10**	**6.10**	**2.32**	**7.78**	**2.71**

LWT: Leaving water temperature
Qh: Heat capacity
COP: Coefficient of performance

Application data
Water inlet/outlet temperature difference = 5 °C, 8 °C for LWT = 55 °C

Cooling

LWT [°C]	Inlet outdoor air temperature °C	
	35	
	Qc [kW]	EER
7	**4.90**	**2.13**
18	**6.90**	**3.65**

LWT: Leaving water temperature
Qc: Cooling capacity
EER: Energy efficiency ratio

Application data
Water inlet/outlet temperature difference = 5 °C

AEI 1G110 BEMX/EMX 3PH data sheet

Villas, offices or businesses... it's perfect and always with DHW

With a good heat capacity, this unit is ideal for building hybrid air/air and air/water systems in both medium-sized residential and small commercial buildings. Featuring a compact, single-valve structure it also allows for the connection of up to 4 indoor units of any type, such as air, water, radiant panels or low-temperature radiators, in a single, dual, triple or quadruple configuration.
By using the EMIX port to connect the unit to an EMIX/EMIX TANK, mixed applications can be created to produce domestic hot water at the same time.
The G110 unit is available in both a single-phase and three-phase version.

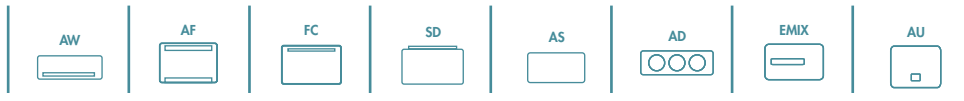

Possible combinations with indoor units (sizes)

A2W	A2A / A2W ●	A2A
AUCH	AUBH+A+A+A •	D •
AUCH •	AUBH+A+A+B •	A+C •
	AUBH+B+B •	A+B •
	AUCH+A+A+A •	B+B •
	AUCH+A+B •	A+A+A •
		A+A+B •
		A+B+B
		A+A+A+A •
		A+A+A+B

• With EMIX/EMIX TANK
● Mixed configuration: air/air for cooling and air/water for heating

SIMULTANEOUS OPERATION IS NOT POSSIBLE

AEI 1G110 BEMX/EMX 3PH data sheet

OUTDOOR UNIT				AEI1G110 BEMX (1ph) AEI1G110EMX 3PH (3ph)	
Matchable units for Domestic Hot Water (DWH) production				EMIX TANK V2 (200-300 liters)	
				EMIX V1 + External Tank	
				External Tank + 3-way valve	
Matchable air/air Indoor units				see technical datasheets	
Matchable air/water Indoor units				AUCH	
AIR/WATER					
				Cooling	Heating
Performance according to EN 14511	Air +35°C - Water 23/18°C Air + 7°C - Water 30/35°C	Nominal-max. Cooling/Heating capacity	kW	9.10-12.10	10.63-14.17
		Nominal electric power input	kW_{el}	2.51	2.61
		Nominal EER/COP		3.62	4.07
	Air +35°C - Water 12/7°C Air - 7°C - Water 30/35 °C	Nominal Cooling/Heating capacity	kW	6.50	7.30
		Nominal electric power input	kW_{el}	3.16	3.29
		Nominal EER/COP		2.06	2.22
Performance according to ERP Ecodesign EN 14825	LOW TEMPERATURE AVERAGE season	Nominal Heating capacity	kW	8.00	
		Seasonal energy efficiency ηs	%	150	
		SCOP		3.83	
		Energy efficiency class		A++	
	MEDIUM TEMPERATURE AVERAGE season	Nominal Heating capacity	kW	7	
		Seasonal energy efficiency ηs	%	110	
		SCOP		2.83	
		Energy efficiency class		A+	
AIR/AIR					
				Cooling	Heating
Performance according to EN 14511	Outdoor air +35°C - Indoor air 27°C Outdoor air + 7°C - Indoor air 20°C	Nominal (min.-max) Cooling/Heating capacity	kW	8.65 (1.80 / 11.50)	11.00 (1.90 / 13.50)
		Nominal electric power input	kW_{el}	2.46	2.59
		Nominal EER/COP		3.51	4.24
Performance according to ERP Ecodesign EN 14825	AVERAGE season	Pdesignc/Pdesignh	kW	10.60	9.40
		SEER/COP		6.60	4.10
		Energy efficiency class		A++	A+
DOMESTIC HOT WATER					
DHW Performance according to EN 16147	With 300L tank and diverting valve	Load profile		XL	
		Energy efficiency class		A	
		DHW COP		2.14	
		ERP efficiency	%	87	
	With Emix Tank 300 V2	Load profile		XL	
		Energy efficiency class		A	
		DHW COP		2.57	
		ERP efficiency	%	106	
		Heating-up time from 10°C to 48°C	h:m	2:47	
Unit operation data		Outdoor temperature operating range	°C	-15 / +43	-20 / +24
		Indoor temperature operating range	°C	+10 / +47	+5 / +27
		Power supply (Voltage/Phases/Frequency)	V/Ph/Hz	230/1+T/50-60 - 400/3N+T/50	
		Maximum electric consumption	kW/A	4.50/20.5 (1ph) - 4.50/7.60 (3ph)	
		Sound pressure	dB(A)	45	
		Sound power	dB(A)	65	
Components and dimensions		Compressor type		Twin Rotary	
		Fan air flow rate	m^3/h	3500	
		Weight	kg	90	
		Dimensions H/W/D	mm	1070/1190/400	
Cooling lines		Diameters (liquid-gas)	inch	1/4"-3/8"(x3) / + 1/4"-1/2" + 3/8"-3/8"(eMIX)	
		Total length of pipes (standard charge)	m	multi 40 / single 30	
		Total length of pipes (additional charge)	m	multi 65 / single 50	
		Pipe length per unit (standard charge)	m	30	
		Pipe length per unit (additional charge)	m	30	
		Maximum height difference IU-OU	m	10	
		Maximum height difference IU-IU	m	5	
Refrigerant		Type and GWP		R410A / 2088 kg CO_2 eq.	
		Standard charge		3.38 kg / 7.05 Tons CO_2 eq.	

Notes

The equipment described in this catalogue contains HFC-410A-type fluorinated greenhouse gases. These products must be fitted by qualified staff pursuant to European regulations 303/2008 and 517/2014.

PRELIMINARY data declared in accordance with REGULATION (EU) No 811/2013 of 18 February 2013 with regard to the energy labelling of space heaters, combination heaters, packages of space heater, temperature control and solar device and packages of combination heater, temperature control and solar devices, packages of combination heater, temperature control and solar devices, and with COMMISSION REGULATION (EU) No 813/2013 of 2 August 2013 implementing Directive 2009/125/EC of the European Parliament and of the Council with regard to ecodesign requirements for space heaters and combination heaters. Argoclima reserves the right to amend the data presented in this catalogue at any time and without notice.

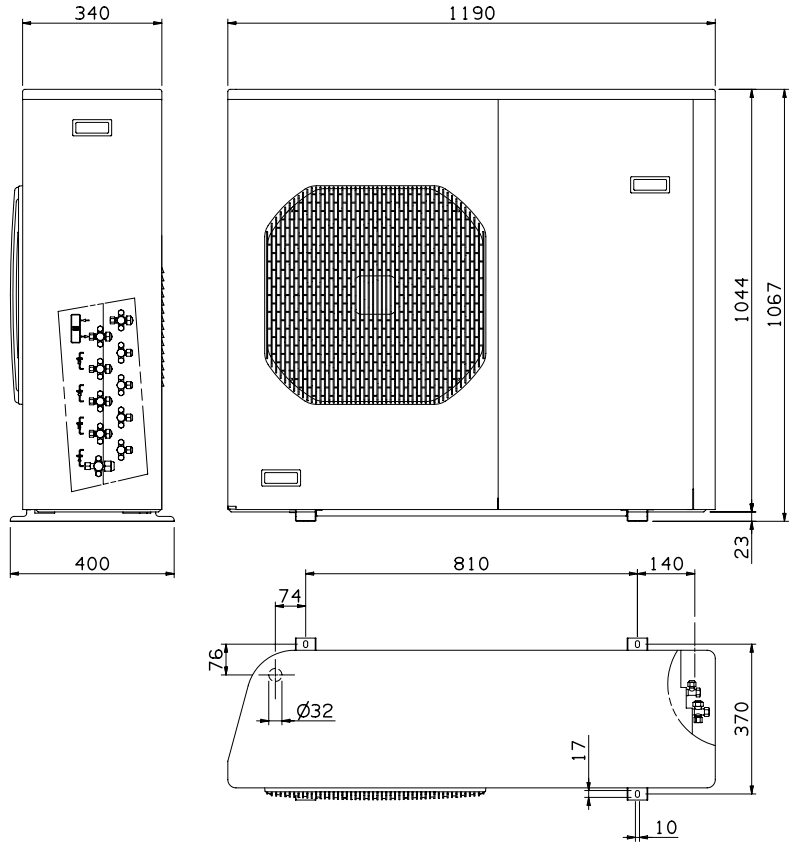

Data based on the UNI/TS 11300-4:2012 standard

Heating

LWT [°C]	Outdoor air temperature - Dry Bulb (Wet Bulb) - °C									
	-10 (-11)		-7 (-8)		2 (1)		7 (6)		12 (11)	
	Qh [kW]	COP	Qh [kW]	COP	Qh [kW]	COP	Qh [kW]	COP	Qh [kW]	COP
20	**7.50**	**2.40**	**8.30**	**2.36**	**9.40**	**2.64**	**12.50**	**3.07**	**13.20**	**3.45**

LAT: Leaving air temperature
Qh: Heat capacity
COP: Coefficient of performance

Cooling

LWT [°C]	Inlet outdoor air temperature °C	
	35	
	Qc [kW]	EER
27 (19)	**11.50**	**3.36**

LAT: Leaving air temperature
Qc: Cooling capacity
EER: Energy efficiency ratio

Data based on the EN 14511-3:2013 standard

Heating

LWT [°C]	Outdoor air temperature - Dry Bulb (Wet Bulb) - °C									
	-7 (-8)		-2 (-3)		2 (1)		7 (6)		12 (11)	
	Qh [kW]	COP	Qh [kW]	COP	Qh [kW]	COP	Qh [kW]	COP	Qh [kW]	COP
35	**7.30**	**2.22**	**8.14**	**2.80**	**8.81**	**3.29**	**10.63**	**4.07**	**12.15**	**4.70**
45	**6.70**	**1.97**	**7.73**	**2.28**	**8.02**	**2.61**	**9.59**	**3.02**	**11.14**	**3.37**
55	**6.11**	**1.55**	**6.24**	**1.93**	**7.03**	**2.02**	**8.13**	**2.37**	**9.55**	**2.41**

LWT: Leaving water temperature
Qh: Heat capacity
COP: Coefficient of performance

Application data
Water inlet/outlet temperature difference = 5 °C, 8 °C for LWT = 55 °C

Cooling

LWT [°C]	Inlet outdoor air temperature °C	
	35	
	Qc [kW]	EER
7	**6.50**	**2.06**
18	**9.10**	**3.62**

LWT: Leaving water temperature
Qc: Cooling capacity
EER: Energy efficiency ratio

Application data
Water inlet/outlet temperature difference = 5 °C

AEI 1G140 EMX 3PH data sheet

For more powerful systems, 5 connections and DHW production

The biggest size now available in the iSERIES outdoor-unit range is designed to cater for applications that require outstanding performance levels and a higher number of connected indoor units (up to 5) in order to create air-air and air-water configurations of various types. Ideal for small-sized restaurants, offices, bars, single family villas and large apartments. It allows for the connection of up to 5 indoor units of any type, such as air, water, radiant panels or low-temperature radiators, in a single, dual, triple, quadruple or quintuple configuration. By using the EMIX port to connect the unit to an EMIX/EMIX TANK, mixed applications can be created to produce domestic hot water at the same time. The G140 unit is available in three-phase and single-phase versions (within this year).

Possible combinations with indoor units (sizes)

A2W	A2A / A2W ●	A2A
AUDH	AUCH+A+A+A •	A+D •
AUDH •	AUCH+A+A+B •	B+D
	AUCH+A+A+A+A •	B+C •
	AUCH+A+A+A+B •	C+C
	AUCH+B+B •	A+A+D
	AUDH+A+B •	A+A+C •
	AUDH+A+A+A •	A+A+A+C
		A+A+A+A •
		A+A+A+B •
		A+A+A+A+A •
		A+A+A+A+B

• With EMIX/EMIX TANK

● Mixed configuration: air/air for cooling and air/water for heating

SIMULTANEOUS OPERATION IS NOT POSSIBLE

OUTDOOR UNIT				AEI1G140 EMX3PH	
Matchable units for Domestic Hot Water (DWH) production				EMIX TANK V2 (200-300 liters)	
				EMIX V1 + External Tank	
				External Tank + 3-way valve	
Matchable air/air Indoor units				see technical datasheets	
Matchable air/water Indoor units				AUDH	
AIR/WATER					
				Cooling	Heating
Performance according to EN 14511	Air +35°C - Water 23/18°C Air + 7°C - Water 30/35°C	Nominal-max. Cooling/Heating capacity	kW	11.60-12.10	13.80-15.89
		Nominal electric power input	kW_{el}	3.20	3.44
		Nominal EER/COP		3.63	4.01
	Air +35°C - Water 12/7°C Air - 7°C - Water 30/35 °C	Nominal Cooling/Heating capacity	kW	8.30	10.50
		Nominal electric power input	kW_{el}	3.79	4,1
		Nominal EER/COP		2.19	2.56
Performance according to ERP Ecodesign EN 14825	LOW TEMPERATURE AVERAGE season	Nominal Heating capacity	kW	12.00	
		Seasonal energy efficiency ηs	%	167	
		SCOP		4.24	
		Energy efficiency class		A++	
	MEDIUM TEMPERATURE AVERAGE season	Nominal Heating capacity	kW	11	
		Seasonal energy efficiency ηs	%	112	
		SCOP		2.87	
		Energy efficiency class		A+	
AIR/AIR					
				Cooling	Heating
Performance according to EN 14511	Outdoor air +35°C - Indoor air 27°C Outdoor air + 7°C - Indoor air 20°C	Nominal (min.-max) Cooling/Heating capacity	kW	10.60 (2.60 / 13.70)	12.00 (3.10 / 15.50)
		Nominal electric power input	kW_{el}	3.12	2.18
		Nominal EER/COP		3.40	5.50
Performance according to ERP Ecodesign EN 14825	AVERAGE season	Pdesignc/Pdesignh	kW	13.60	11.50
		SEER/COP		5.11	4.13
		Energy efficiency class		A++	A+
DOMESTIC HOT WATER					
DHW Performance according to EN 16147	With 300L tank and diverting valve	Load profile		XL	
		Energy efficiency class		A	
		DHW COP		2.12	
		ERP efficiency	%	86	
	With Emix Tank 300 V2	Load profile		XL	
		Energy efficiency class		A	
		DHW COP		2.71	
		ERP efficiency	%	112	
		Heating-up time from 10°C to 48°C	h:m	2:08	
Unit operation data		Outdoor temperature operating range	°C	-15 / +43	-20 / +24
		Indoor temperature operating range	°C	+10 / +47	+5 / +27
		Power supply (Voltage/Phases/Frequency)	V/Ph/Hz	400/3+N+T/50	
		Maximum electric consumption	kW/A	5.30/8.90	
		Sound pressure	dB(A)	45	
		Sound power	dB(A)	65	
Components and dimensions		Compressor type		Twin Rotary	
		Fan air flow rate	m^3/h	3500	
		Weight	kg	145	
		Dimensions H/W/D	mm	1335/1270/450	
Cooling lines		Diameters (liquid-gas)	inch	1/4"-3/8"(x3)+1/4"-1/2"(x2)+1/2"-1/2"(eMIX)	
		Total length of pipes (standard charge)	m	multi 40 / single 30	
		Total length of pipes (additional charge)	m	multi 100 / single 50	
		Pipe length per unit (standard charge)	m	30	
		Pipe length per unit (additional charge)	m	30	
		Maximum height difference IU-OU	m	10	
		Maximum height difference IU-IU	m	5	
Refrigerant		Type and GWP		R410A / 2088 kg CO_2 eq.	
		Standard charge		4.4 kg / 9.18 Tons CO_2 eq.	

Notes

The equipment described in this catalogue contains HFC-410A-type fluorinated greenhouse gases. These products must be fitted by qualified staff pursuant to European regulations 303/2008 and 517/2014.

PRELIMINARY data declared in accordance with REGULATION (EU) No 811/2013 of 18 February 2013 with regard to the energy labelling of space heaters, combination heaters, packages of space heater, temperature control and solar device and packages of combination heater, temperature control and solar devices, packages of combination heater, temperature control and solar devices, and with COMMISSION REGULATION (EU) No 813/2013 of 2 August 2013 implementing Directive 2009/125/EC of the European Parliament and of the Council with regard to ecodesign requirements for space heaters and combination heaters. Argoclima reserves the right to amend the data presented in this catalogue at any time and without notice.

AEI 1G140 EMX/3PH data sheet

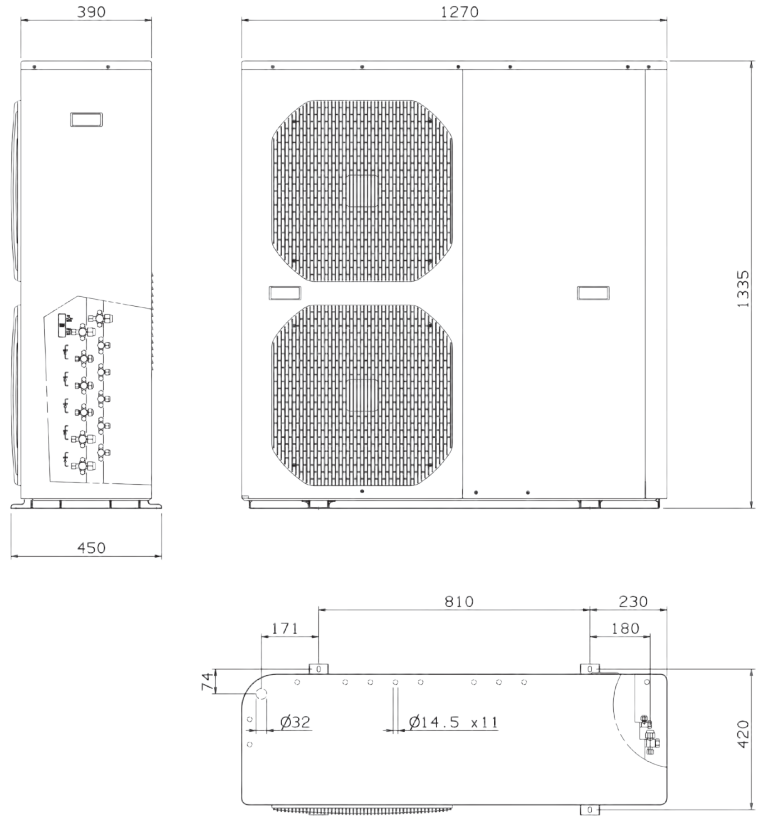

Data based on the UNI/TS 11300-4:2012 standard

Heating

LWT [°C]	Outdoor air temperature - Dry Bulb (Wet Bulb) - °C									
	-10 (-11)		-7 (-8)		2 (1)		7 (6)		12 (11)	
	Qh [kW]	COP	Qh [kW]	COP	Qh [kW]	COP	Qh [kW]	COP	Qh [kW]	COP
20	**8.20**	**2.29**	**10.10**	**2.76**	**10.90**	**2.46**	**15.50**	**3.10**	**16.30**	**3.51**

LAT: Leaving air temperature
Qh: Heat capacity
COP: Coefficient of performance

Cooling

LWT [°C]	Inlet outdoor air temperature °C	
	35	
	Qc [kW]	EER
27 (19)	**13.70**	**2.60**

LAT: Leaving air temperature
Qc: Cooling capacity
EER: Energy efficiency ratio

Data based on the EN 14511-3:2013 standard

Heating

LWT [°C]	Outdoor air temperature - Dry Bulb (Wet Bulb) - °C									
	-7 (-8)		-2 (-3)		2 (1)		7 (6)		12 (11)	
	Qh [kW]	COP	Qh [kW]	COP	Qh [kW]	COP	Qh [kW]	COP	Qh [kW]	COP
35	**10.50**	**2.56**	**10.14**	**2.78**	**11.01**	**3.21**	**13.80**	**4.01**	**14.65**	**4.62**
45	**9.50**	**1.96**	**9.35**	**2.22**	**10.15**	**2.58**	**12.10**	**3.00**	**13.05**	**3.28**
55	**8.30**	**1.68**	**7.98**	**1.90**	**8.65**	**2.00**	**9.95**	**2.15**	**11.50**	**2.38**

LWT: Leaving water temperature
Qh: Heat capacity
COP: Coefficient of performance

Application data
Water inlet/outlet temperature difference = 5 °C, 8 °C for LWT = 55 °C

Cooling

LWT [°C]	Inlet outdoor air temperature °C	
	35	
	Qc [kW]	EER
7	**8.30**	**2.19**
18	**11.60**	**3.63**

LWT: Leaving water temperature
Qc: Cooling capacity
EER: Energy efficiency ratio

Application data
Water inlet/outlet temperature difference = 5 °C

Notes

iSERIES™

Hydronic and direct-expansion indoor units

argo
improve your life

AQUA UNIT data sheet
hydronic modules

The hydronic unit for iSERIES

The AQUA UNIT indoor units combined with the outdoor units from the iSERIES range are used to heat and cool hydronic systems, such as radiant systems, low-temperature radiators and fan coil units.

HOME AUTOMATION | EC PUMP | ELECTRIC BACK UP

Available models

CODE	MODEL	SIZE	DESCRIPTION
387030200	AUAH	A	Internal Hydronic module **size A** (4.1 kW heating, 5.3 kW cooling), with inverter pump, control panel integrated, 7-litre expansion vessel and 2 kW backup electric heater.
387030201	AUBH	B	Internal Hydronic module **size B** (6.5 kW heating, 5.6 kW cooling), with inverter pump, control panel integrated, 7-litre expansion vessel and 2 kW backup electric heater.
387030202	AUCH	C	Internal Hydronic module **size C** (10.6 kW heating, 9.1 kW cooling), with inverter pump, control panel integrated, 7-litre expansion vessel and 2 kW backup electric heater.
387030203	AUDH	D	Internal Hydronic module **size D** (13.6 kW heating, 11.6 kW cooling), with inverter pump, control panel integrated, 7-litre expansion vessel and 2 kW backup electric heater.

Reference conditions

HEATING: Water temperature 35/30 °C, outdoor air temperature 7 °C - EN 14511:2013

COOLING: Water temperature 18/23 °C, outdoor air temperature 35 °C - EN 14511:2013

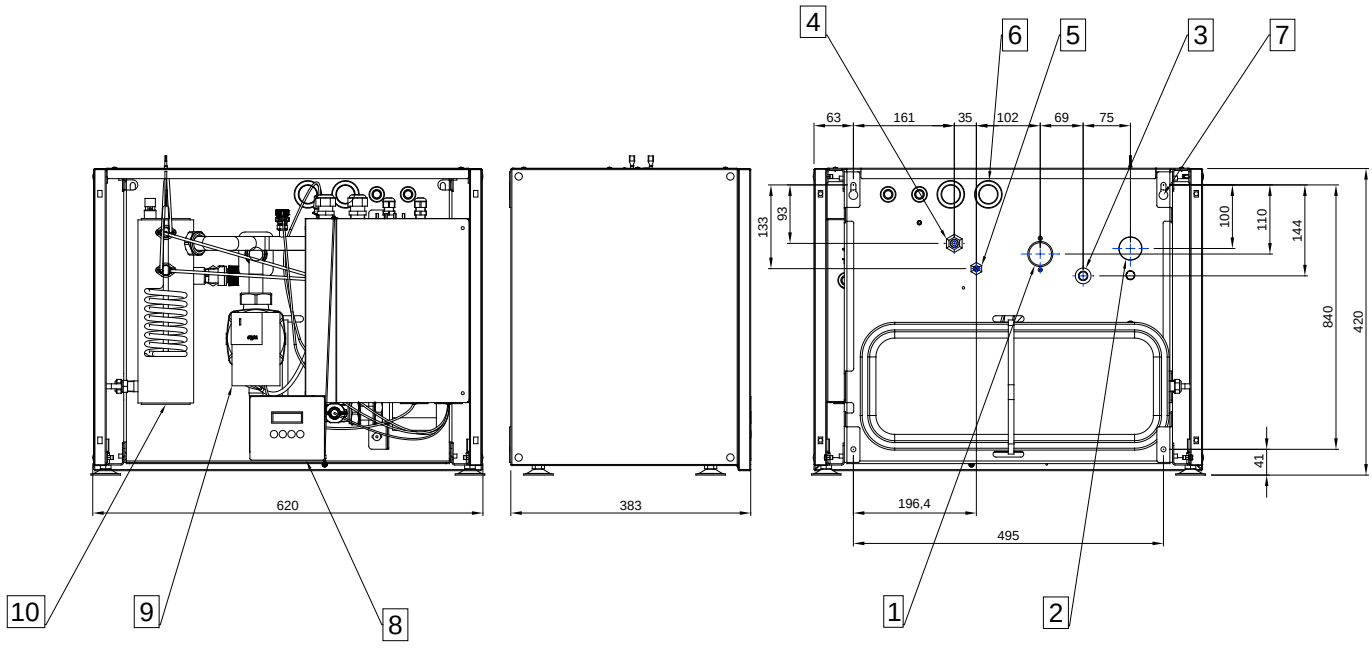

1. Technical water inlet
2. Technical water outlet
3. Safety valve fitting
4. Gas line fitting
5. Liquid line fitting
6. Wiring of electrical cables
7. Ø=8-mm holes for wall mounting units
8. Control panel
9. Pump
10. 2 kW electric heating element

TECHNICAL DATA		AUAH	AUBH	AUCH	AUDH
Electrical power supply	V/Ph/Hz	220-240/1/50			
Maximum electricity consumption	kW	0.006 + 2"(per heating element)			
Hydraulic connections	inch	3/4'' M			
DWV evacuation connection	mm	18			
Outdoor unit connection circuit		circuit A (1)			
Cooling circuit connections (gas)	inch	1/2''	1/2''	1/2''	5/8''
Cooling circuit connections (liquid)	inch	1/4''	1/4''	1/4''	3/8''
Refrigerant type		R410A			
Minimum cooling pipe length	m	3			
Maximum cooling pipe length	m	Ref. to outdoor unit datasheets			
Maximum height difference between indoor unit and outdoor unit	m				
Maximum height difference between indoor units (installation with other IU)	m				
Additional gas charge (if required)	g/m				
Minimum operating water pressure	bar	1.5			
Maximum operating water pressure	bar	2			
Pressure relief valve set	bar	3			
Maximum water outlet temperature	°C	up to 58 (2)			
Minimum water volume	litres	40	40	80	80
Net weight	kg	33.5	34	35	36
Net dimensions (H./W./D.)	mm	488/383/620			

(1) Connect only to circuit A of the outdoor unit
(2) With reference to diagram of "Maximum outlet water temperature"

AQUA UNIT data sheet
hydronic modules

Maximum outlet water temperature

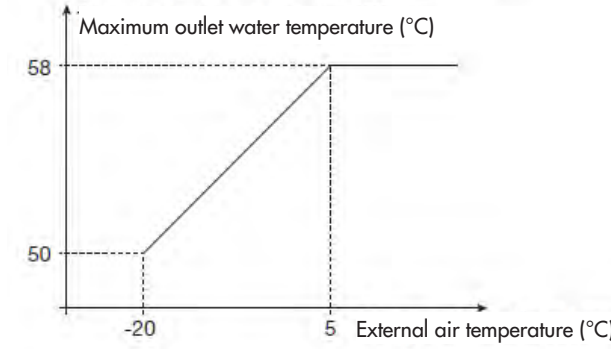

Characteristic curve of pumps and load loss in the units

AUAH

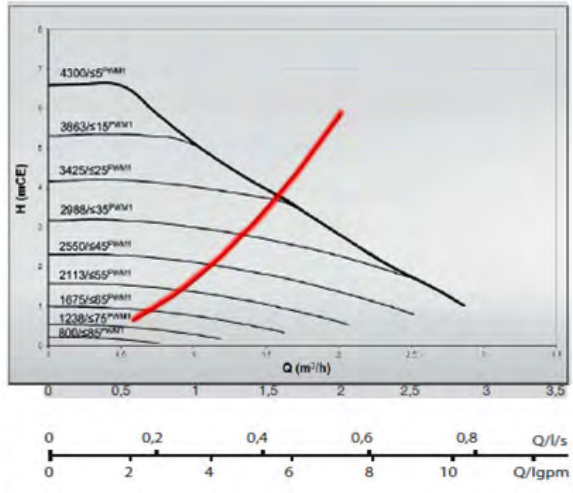

AUBH

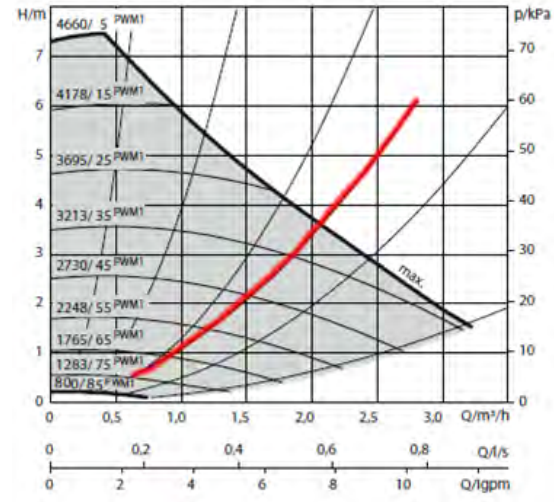

AUCH

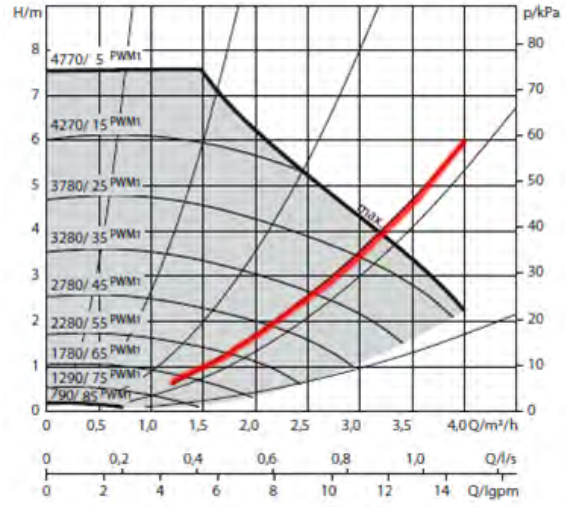

AUDH

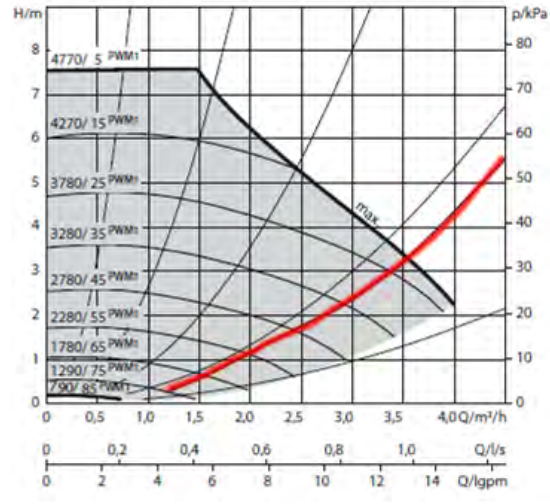

Notes

A19 data sheet

direct-expansion indoor unit

Innovative and appealing design, fine finishes

Made with a quality PS compact and efficient structure, with high-gloss finish and chromed edges on the front panel and special processing on the flaps and surrounding area, A19 is a real interior design feature which perfectly fits any type of residential and commercial setting.

Maximum comfort with ECO - power - iFeel - swing

The operation modes "Eco" and "High Power" ensure maximum comfort and can be activated to save energy or have maximum silence, or, on the other side, to enjoy maximum comfort in the shortest time possible.
Furthermore, the iFeel function ensures comfort conditions in the exact point where the remote control is. The adjustable flap can be set to various positions or it can automatically swivel, ensuring an optimal air distribution in the room.

Air is even more pure with the plasma monolithic filter

A19 is equipped with washable filters on the first level, aimed to protect the exchanger, and with a sophisticated electronic monolithic plasma filter which does not need maintenance and can be controlled from the remote control; the plasma filter deactivates bacteria and oxidises several polluting organic and inorganic particles. In addition, the special Autoclean function protects the heat exchanger from mould and bacteria.

Ⓐ AWIA S19

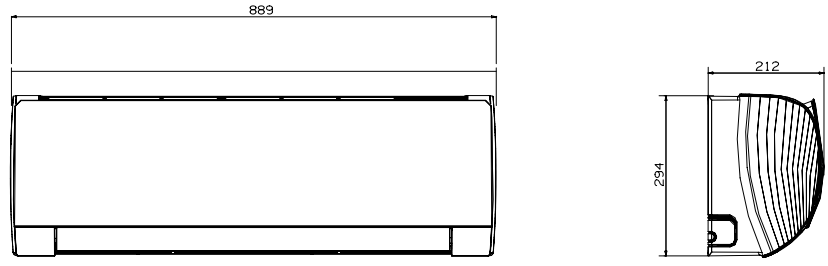

Ⓑ AWIB S19

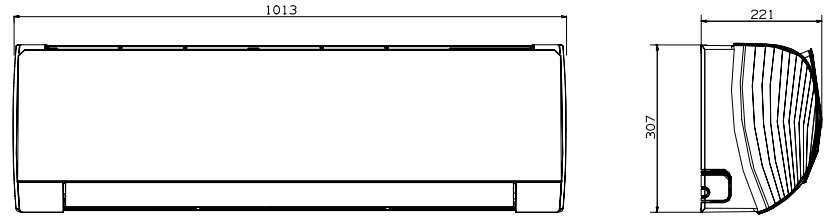

MODEL		AWIAS19	AWIBS19
Heating/cooling capacity	kW	up to 3.7/3.9	up to 5.7/7.0
Size		A	B
Air flow rate (el.-l.-m.-h.-eh.)	m^3/h	390 - 420 - 490 - 620 - 680	470 - 520 - 610 - 720 - 800
Dehumidification	l/h	1.4	1.8
Fan speed	No.	5	5
Sound pressure at 2 m (el.-l.-m.-h.-eh.)	dB(A)	29 - 32 - 37 - 41 - 48	36 - 39 - 43 - 48 - 50
Sound power (el.-l.-m.-h.-eh.)	dB(A)	38 - 41 - 46 - 50 - 57	45 - 48 - 52 - 57 - 59
Electrical power supply	V/Ph/Hz	230/1/50	230/1/50
Type of motor		DC Inverter	DC Inverter
Power usage	W	20	35
Fluid pipe diameter	mm (inch)	6.35 (1/4")	6.35 (1/4")
Gas pipe diameter	mm (inch)	9.52 (3/8")	12.7 (1/2")
Net dimensions (H./W./D.)	mm	294/889/212	307/1013/221
Net weight	kg	11	13.5
Remote control supplied		Yes	Yes
Ambient temperature adjustment range	°C	from +10 to +32	from +10 to +32
"Cold Plasma" purification system		Yes	Yes

A7 - A9 data sheet

direct-expansion indoor unit

Sophisticated and discreet also at maximum power

Elegant and essential wall-mounted indoor unit, suitable for any circumstances in terms of both design and heat capacity.

LEDs that can be disabled

If the A7/A9 LED display is bothersome during night-time hours, the LEDs can be disabled via the remote control.

Activated charcoal filter

The A7/A9 units can be fitted with an optional activated charcoal filter which comprises a layer of synthetic material folded to increase the filtering surface area and treated with a professional anti-bacterial solution, combined with an activated charcoal mesh. The activated charcoal layer attracts and absorbs the organic molecules responsible for unpleasant odours, eliminating them completely.

The casing for model A7/A9 is treated using a photo-engraving technique to obtain a satin effect on the plastic. This is done during the injection stage and no further treatments are applied. You can see the quality of the material and manufacturing process used with the naked eye, which sets the A7/A9 unit apart from all the other white wall-mounted indoor units.

Ⓐ AWIA S7 DC

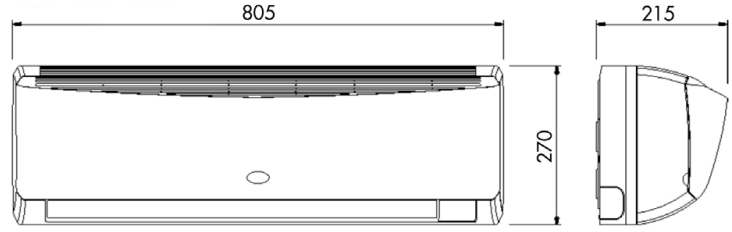

Ⓑ AWIA S9 DC

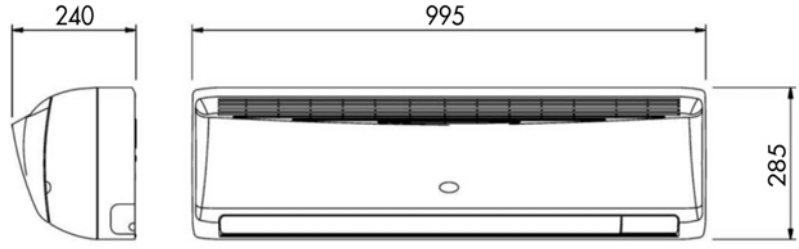

MODEL		AWIA S7 DC	AWIB S9 DC
Heating/cooling capacity	kW	up to 3.7/3.9	up to 5.7/7.0
Size		A	B
Air flow rate (sl.-l.-m.-h.)	m^3/h	390 - 430 - 450 - 470	410 - 580 - 710 - 880
Dehumidification	l/h	1.5	2.0
Fan speed	No.	3 + auto - by remote control	3 + auto - by remote control
Sound pressure at 2 m (sl.-l.-m.-h.)	dB(A)	23 - 29 - 36 - 39	29 - 35 - 43 - 47
Electrical power supply	V/Ph/Hz	230/1/50	230/1/50
Electrical power input	W	12	19
Compressor type		DC Inverter	DC Inverter
Liquid pipe diameter	mm (inch)	6.35 (1/4")	6.35 (1/4")
Gas pipe diameter	mm (inch)	9.52 (3/8")	12.7 (1/2")
Net weight	kg	8	12
Net dimensions (H./W./D.)	mm	270/805/215	285/995/240
Remote control supplied		Yes	Yes
Room temperature adjustment range	°C	from +10 to +32	from +10 to +32
Active carbon filter		Yes	Yes

AF data sheet

direct-expansion indoor unit

Outstanding comfort, ideal for bedrooms

A stylish console for low wall mounting, at just a few centimetres above the floor and with two-way air flow, up and down, for maximum comfort in summer and winter.

AF is made from premium ABS and is well suited to installation under windows or mid-wall mounting, occupying the smallest space possible. Whilst still maintaining the same structure and dimensions, it filters and purifies the air using a washable mesh filter and a titanium dioxide photocatalytic filter that can be activated via remote control. At 22 dB(A), the unit is extremely quiet thanks to its specially designed structure and two tangential fans operated by inverter-controlled DC motors.

Differential ventilation

AF is equipped with a humidity sensor that is used to modulate the temperature according to the perceived temperature index or to limit the maximum relative room humidity percentage. The two fans are activated differentially so as to ensure that air is diffused in the most effective way possible based on the operating mode, either cooling or heating mode.

Special air filter with titanium dioxide TiO_2

Humidex - special humidity sensor

Available in the following sizes:

- (A) AFIA S11 DC
- (B) AFIB S11 DC

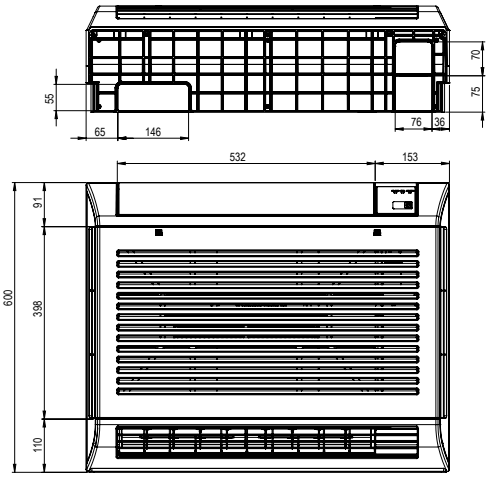

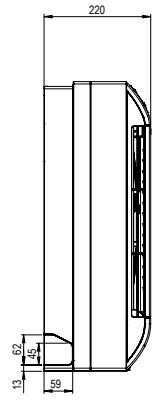

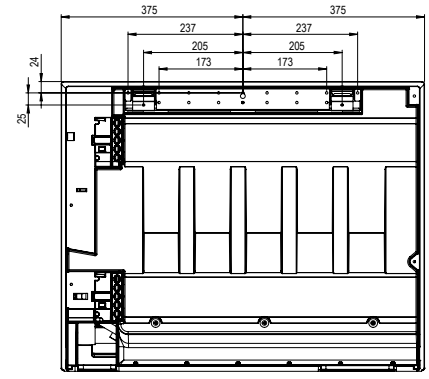

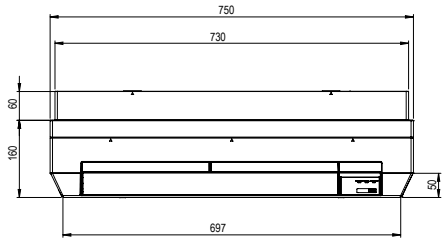

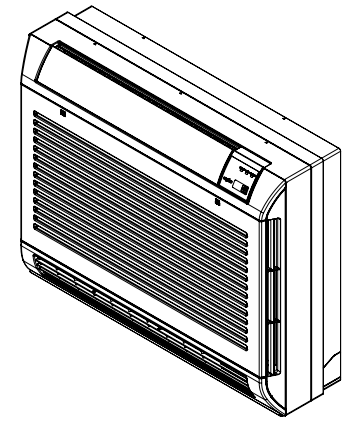

MODEL		AFIA S11 DC V2	AFIB S11 DC V2
Heating/cooling capacity	kW	up to 3.7/3.9	up to 5.7/7.0
Size		A	B
Air flow rate (sl.-l.-m.-h.)	m³/h	450 - 500 - 590 - 700	615 - 665 - 760 - 830
Dehumidification	l/h	1.3	2.3
Fan speed	No.	3 + auto - by remote control	3 + auto - by remote control
Sound pressure at 2 m (sl.-l.-m.-h.)	dB(A)	22 - 26 - 30 - 37	28 - 30 - 37 - 45
Electrical power supply	V/Ph/Hz	230/1/50	230/1/50
Electrical power input	W	12	19
Compressor type		DC Inverter	DC Inverter
Liquid pipe diameter	mm (inch)	6.35 (1/4")	6.35 (1/4")
Gas pipe diameter	mm (inch)	9.52 (3/8")	12.7 (1/2")
Net weight	kg	18	18
Net dimensions (H./W./D.)	mm	600/750/220	600/750/220
Remote control supplied		Yes	Yes
Room temperature adjustment range	°C	from +10 to +32	from +10 to +32
TiO2 filter		Yes	Yes
Relative humidity sensor		Yes	Yes

FC data sheet

direct-expansion indoor unit

The most versatile: for floor and ceiling installation

Reversible indoor unit for floor or ceiling use and can be fitted in sight. Integrates perfectly into any space.

Slim and silent

The depth of only 19 cm and quiet operation at 24 dB(A) make this unit an excellent solution for villas, offices, hotel rooms, restaurants and public spaces. Featuring easy installation and condensation discharge, the unit is simple and convenient to maintain.

Humidex - special humidity sensor

Available in the following sizes:

- (A) FCIA S8 DC
- (B) FCIB S9 DC

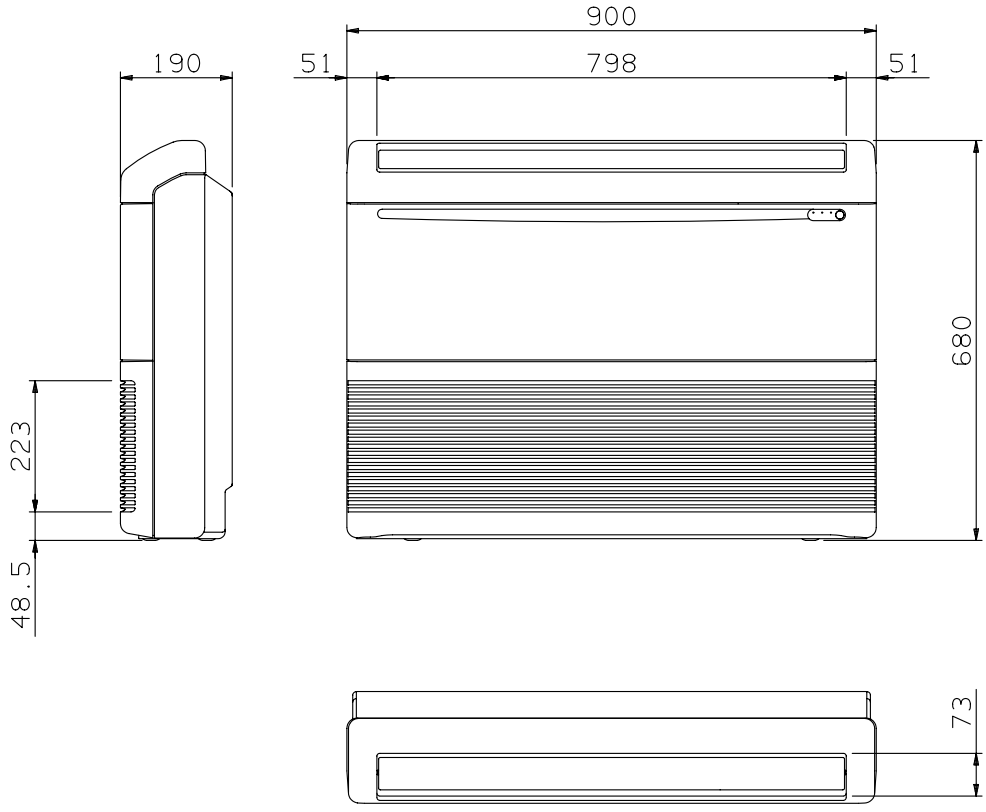

MODEL		FCIA S8 DC	FCIB S9 DC
Heating/cooling capacity	kW	up to 3.7/3.9	up to 5.7/7.0
Size		A	B
Air flow rate (sl.-l.-m.-h.)	m^3/h	310 - 390 - 430 - 520	450 - 510 - 610 - 720
Dehumidification	l/h	1.3	2.3
Fan speed	No.	3 + auto - by remote control	3 + auto - by remote control
Sound pressure at 2 m (sl.-l.-m.-h.)	dB(A)	24 - 26 - 30 - 37	35 - 40 - 46 - 49
Electrical power supply	V/Ph/Hz	230/1/50-60	230/1/50-60
Electrical power input		DC Inverter	DC Inverter
Compressor type	W	37	75
Liquid pipe diameter	mm (inch)	6.35 (1/4")	6.35 (1/4")
Gas pipe diameter	mm (inch)	9.52 (3/8")	12.7 (1/2")
Net weight	kg	23.5	23.5
Net dimensions (H./W./D.)	mm	680x900x190	680/900/190
Remote control supplied		Yes	Yes
Room temperature adjustment range	°C	from +10 to +32	from +10 to +32
Relative humidity sensor		Yes	Yes

AS data sheet

direct-expansion indoor unit

The high-quality version of the classic air-conditioning unit

This is the unit for false ceilings that is most often used in public spaces, offices, shops and restaurants. Perfect for large to small commercial spaces.

Attention to aesthetic and functional details

AS is made from insulated metal and consists of a calibrated fan, flaps that can be positioned as desired, a built-in waterspout and air exchange capabilities. The grille is made from high quality plastic: the special material used on the flaps prevents freezing as a result of any condensation that may form.

Simple and convenient maintenance

The large filter is easy to access for cleaning.

Humidex - special humidity sensor

A ASIA S8 DC

B ASIB S9 DC

C ASIC S11 DC

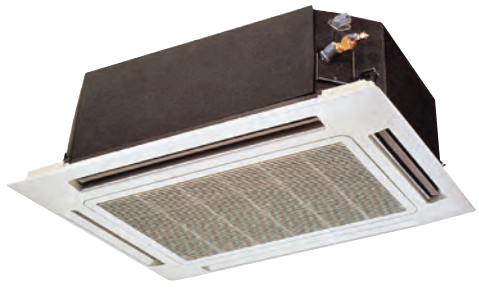

D ASID S13 DC

MODEL		ASIA S8 DC	ASIB S9 DC	ASIC S10 DC	ASID S13 DC
Heating/cooling capacity	kW	up to 3.7/3.9	up to 5.7/7.0	up to 9.0/11.0	up to 13.0/13.9
Size		A	B	C	D
Air flow rate (sl.-l.-m.-h.)	m³/h	200 - 530 - 630 - 750	200 - 530 - 630 - 750	850 - 1060 - 1160 - 1300	1200 - 1700 - 1980 - 2300
Dehumidification	l/h	1.2	2.3	3.6	3.6
Condensation pump static pressure	mm w.c.	250	250	250	250
Fan speed	No.	3 + auto - by remote control	3 + auto - by remote control	3 + auto - by remote control	3 + auto - by remote control
Sound pressure at 2 m (sl.-l.-m.-h.)	dB(A)	27 - 43 - 46 - 50	27 - 43 - 46 - 50	38 - 43 - 44 - 46	38 - 44 - 48 - 52
Electrical power supply	V/Ph/Hz	230/1/50-60	230/1/50-60	230/1/50-60	230/1/50-60
Electrical power input		DC Inverter	DC Inverter	DC Inverter	DC Inverter
Compressor type	W	8-24-28-36	8-24-28-36	13-20-25-41	22-36-43-64
Liquid pipe diameter	mm (inch)	6.35 (1/4")	6.35 (1/4")	6.35 (1/4")	6.35 (1/4")
Gas pipe diameter	mm (inch)	9.52 (3/8")	12.7 (1/2")	12.7 (1/2")	12.7 (1/2")
Net weight	kg	19	20.5	22	27
Net dimensions (H./W./D.)	mm	296/575/575	296//575/575	310/760/760	338/1050/760
Net dimensions of grille (H./W./D.)	mm	41/730/730	41/730/730	30/860/860	30/1150/860
Remote control supplied		Yes	Yes	Yes	Yes
Room temperature adjustment range	°C	from +10 to +32	from +10 to +32	from +10 to +32	from +10 to +32
Relative humidity sensor		Yes	Yes	Yes	Yes

AS data sheet
direct-expansion indoor unit

ASIA S8 DC and ASIB S9 DC units

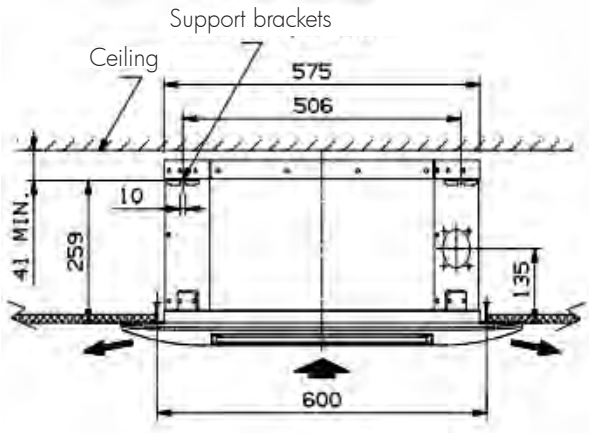

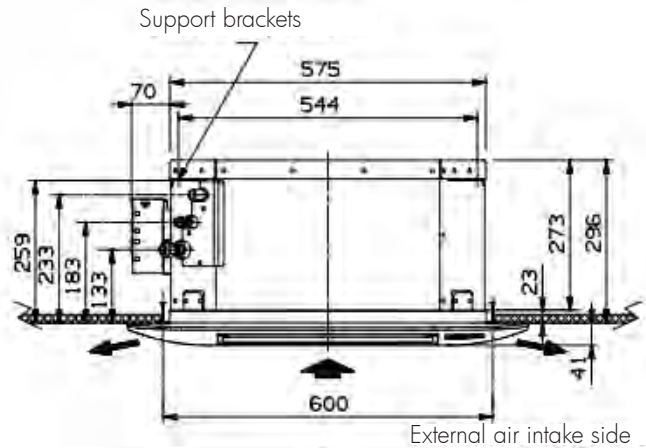

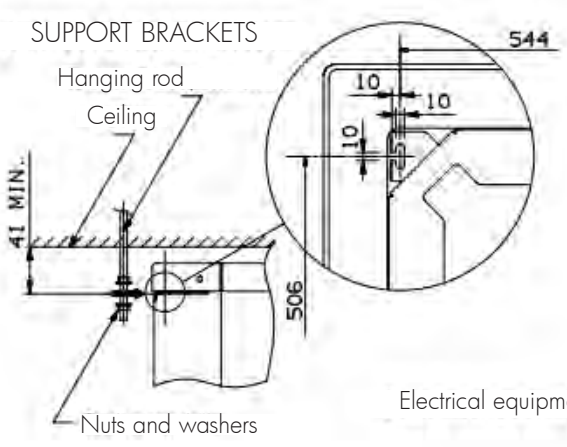

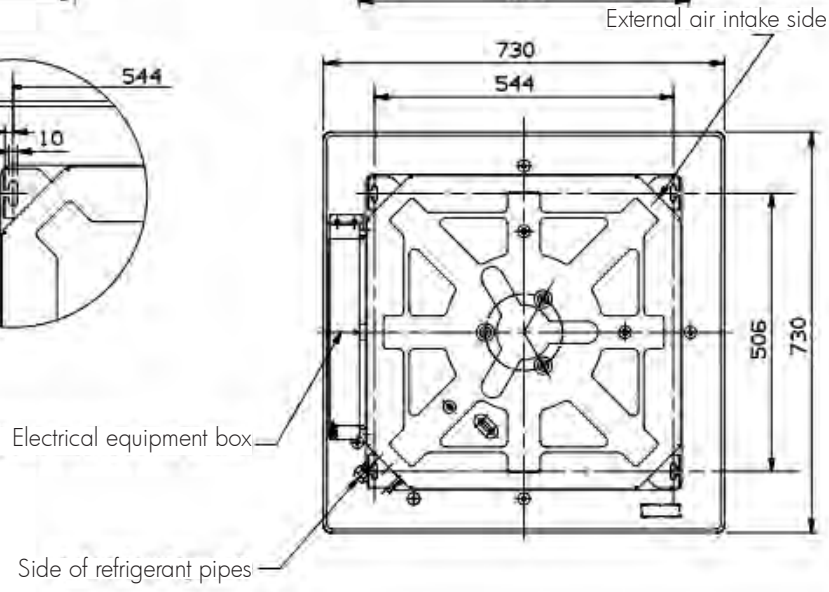

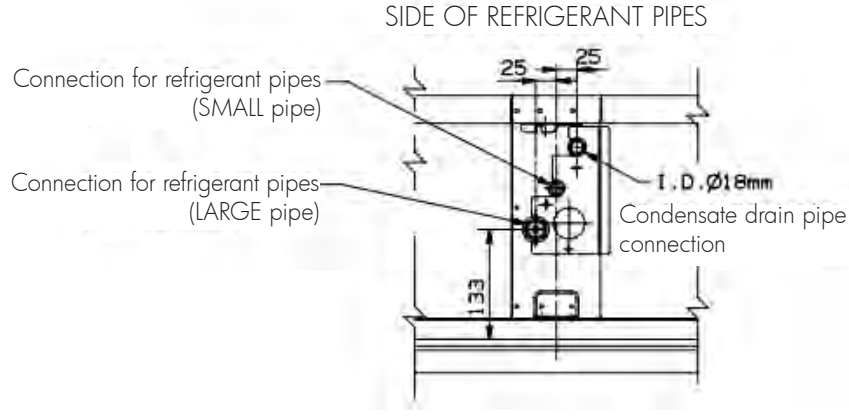

ASIC S10 DC and ASID S13 DC units

MODEL	L	H	X	Y	Z
ASIC S10	760	310	260	860	500
ASID S13	1050	340	290	1150	750

A Condensation drain pipe hole: external diameter of 32 mm

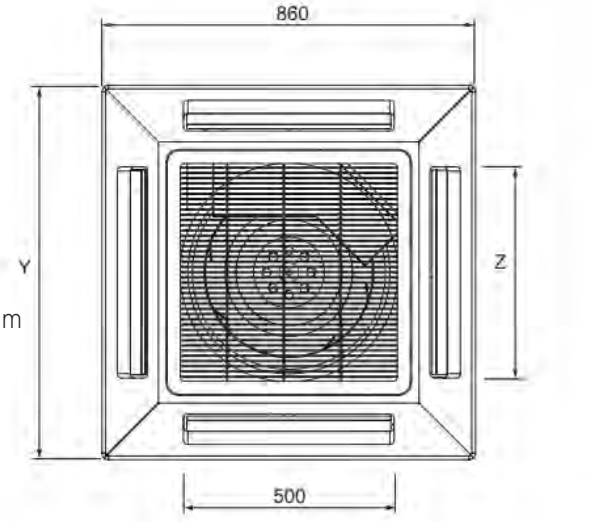

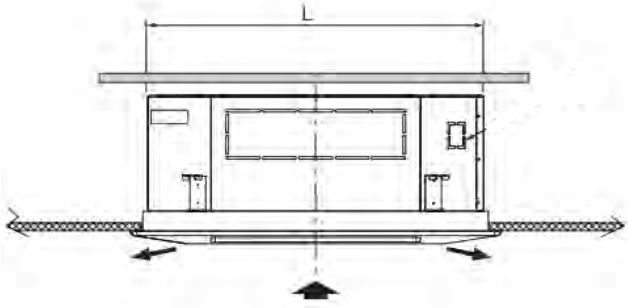

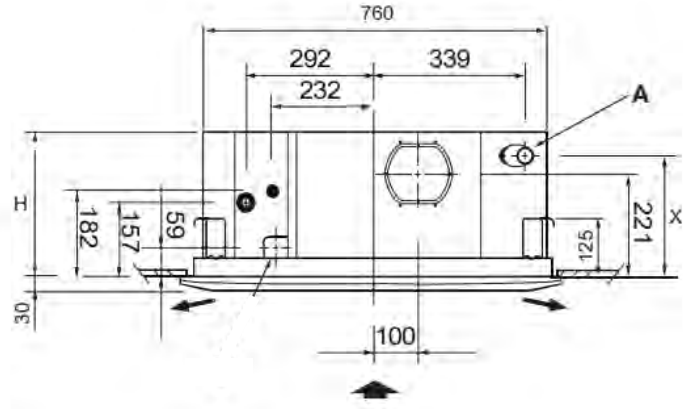

SD data sheet

direct-expansion indoor unit

So slim it disappears

Compact and reversible indoor ductable unit. It can be fitted to be concealed in suitably dedicated spaces in plasterboard or wooden walls, or in false ceilings.

For floor or ceiling mounting

The unit can be fitted both vertically and horizontally, making it easy to install, maintain and access the washable filters.
The depth of only 19 cm and quiet operation make these units an excellent solution for villas, offices, hotel rooms, restaurants and public spaces.

Special function: turbo speed

These units have a special function that can be activated by removing a jumper from the circuit board, which increases the static pressure to channel the air to more adjacent rooms, without needing to use ductable units, whilst also taking full advantage of SD's noiseless and slim design.

Wire and remote-controllable infrared

Even though it was designed to be built-in and therefore concealed, SD is operated by the iSERIES universal remote control, both in wireless and wired modes, by installing a specific infrared receiver and a 5 m cable (supplied).

Humidex - special humidity sensor

Available in the following sizes:

- (A) SDIA S8 DC
- (B) SDIB S9 DC

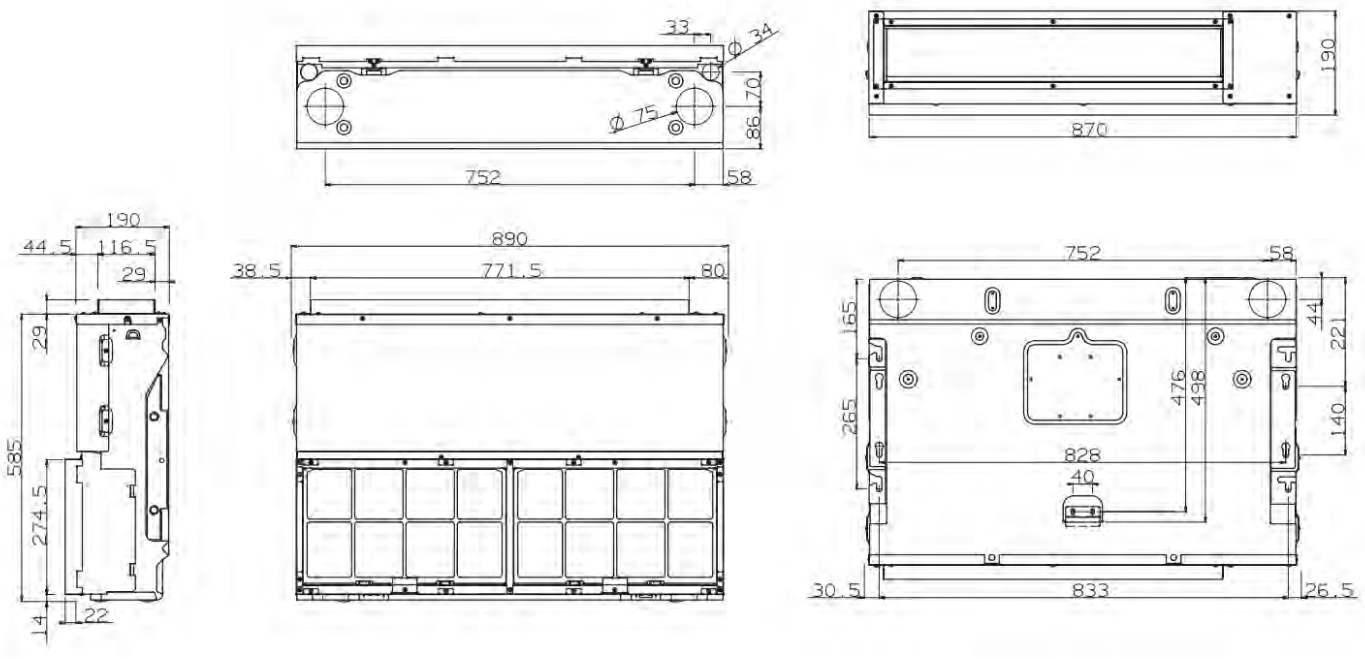

MODEL		SDIA S8 DC	SDIB S9 DC
Heating/cooling capacity	kW	up to 3.7/3.9	up to 5.7/7.0
Size		A	B
Air flow rate (sl.-l.-m.-h.)	m^3/h	310 - 390 - 470 - 600	410 - 520 - 620 - 750
Dehumidification	l/h	1.3	3.3
Fan speed	No.	3 + auto - by remote control	3 + auto - by remote control
Standard static pressure	Pa	7.5	10
Sound pressure at 2 m (sl.-l.-m.-h.)	dB(A)	24 - 26 - 30 - 37	35 - 40 - 46 - 49
Electrical power supply	V/Ph/Hz	230/1/50-60	230/1/50-60
Electrical power input		DC Inverter	DC Inverter
Compressor type	W	37	75
Liquid pipe diameter	mm (inch)	6.35 (1/4")	6.35 (1/4")
Gas pipe diameter	mm (inch)	9.52 (3/8")	12.7 (1/2")
Net weight	kg	25	25
Net dimensions (H./W./D.)	mm	585/890/190	585/890/190
Remote control supplied		Yes	Yes
Room temperature adjustment range	°C	+10 to +32	+10 to +32
Relative humidity sensor		Yes	Yes

SD data sheet

direct-expansion indoor unit

External static pressure diagram of the SDIA S8 DC unit

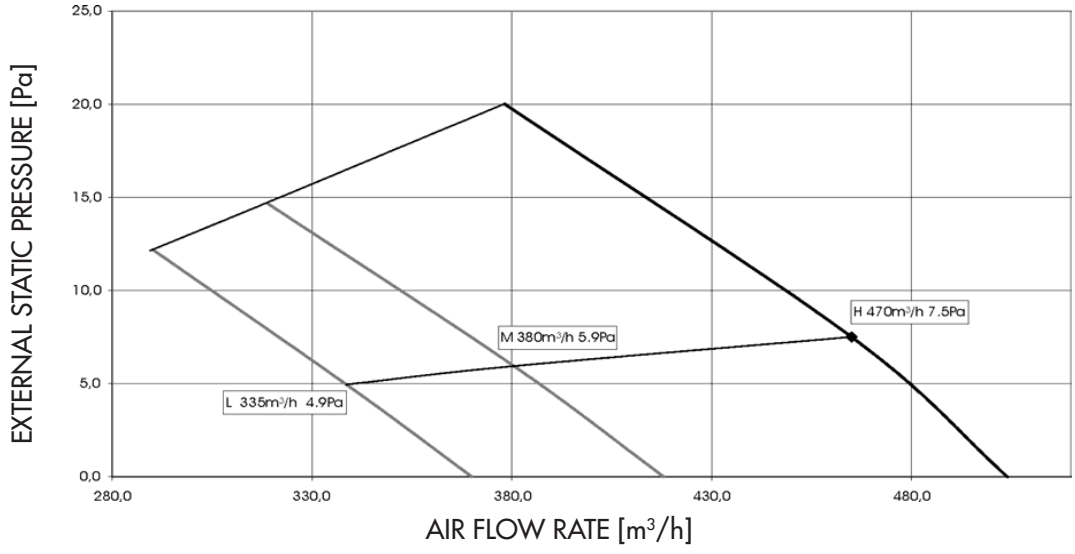

External static pressure diagram of the SDIB S9 DC unit

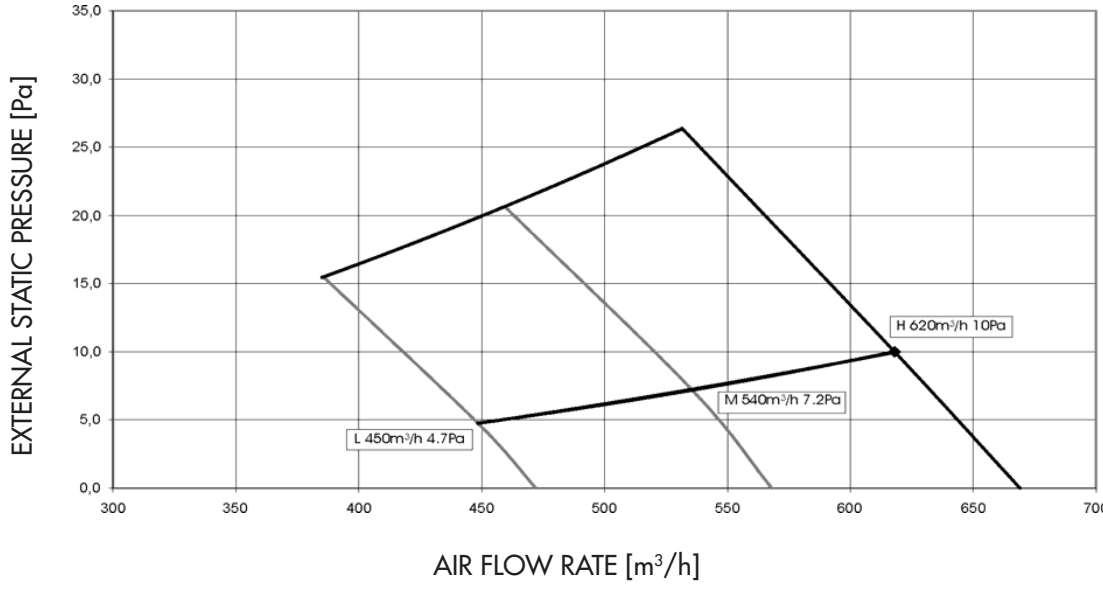

Notes

AD data sheet

direct-expansion indoor unit

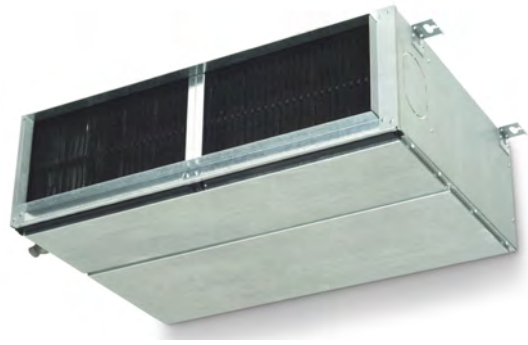

The reliable and flexible ductable solution

Medium prevalence ductable unit, to be combined with built-on-site plenums with or without the aid of the two-way (ADIA) and three-way (ADIB - ADIC) duct. It is suitable for mounting on false ceilings and is built with great care in the selection of materials and assembly of components. This unit can also be connected to a fresh air inlet. A special function can be activated by removing a jumper from the circuit board to increase the static pressure.

Removable filters

The filters can easily be removed for cleaning, facilitating maintenance of the unit.

Wire and remote-controllable infrared

Even though it was designed to be built-in and therefore concealed, AD can be operated by the iSERIES universal remote control, both in wireless and wired modes, by installing a specific infrared receiver and a 5 m cable (supplied).

Humidex - special humidity sensor

Available in the following sizes:

- (A) ADIA S19 DC
- (B) ADIB S13 DC
- (C) ADIC S10 DC

Example of unit installation

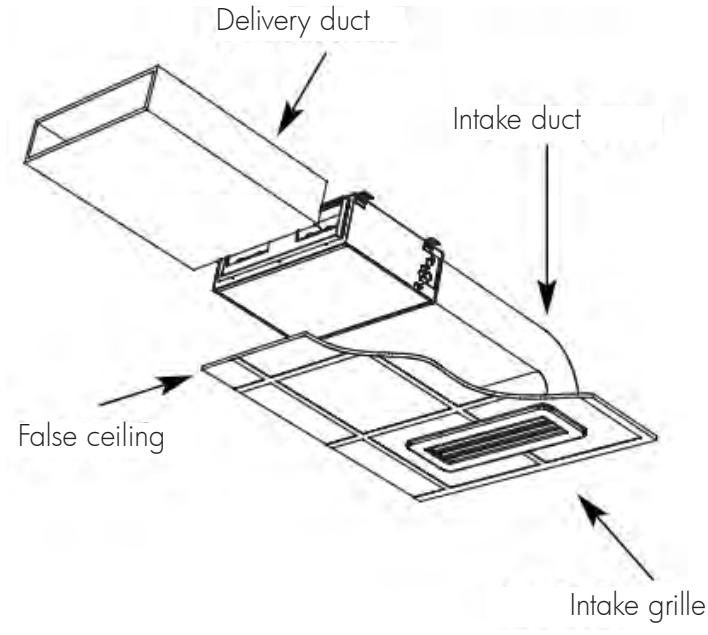

MODEL		ADIA S19 DC	ADIB S13 DC	ADIC S13 DC
Heating/cooling capacity	kW	up to 4.2/4.4	up to 5.7/7.0	up to 9.0/11.0
Size		A	B	C
Air flow rate (-l.-m.-h.-eh.)	m^3/h	600 - 720 - 835 - 930	630 - 855 - 1010 - 1170	630 - 855 - 1010 - 1170
Dehumidification	l/h	0.8	2.3	2.5
Condensation pump static pressure	mm H_2O	250	250	250
Fan speed	No.	3 + auto - by remote control	3 + auto - by remote control	3 + auto - by remote control
Standard static pressure/JP2 contact	Pa	50/60	50/70	50/70
Sound pressure at 2 m (l.-m.-h.-eh.)	dB(A)	35 - 40 - 43 - 45	32 - 35 - 42 - 47	35 - 40 - 46 - 49
Sound power (l.-m.-h.-eh.)	dB(A)	44 - 49 - 53 - 54	41 - 44 - 51 - 56	44 - 49 - 55 - 58
Electrical power supply	V/Ph/Hz	230/1/50-60	230/1/50-60	230/1/50-60
Electrical power input		DC Inverter	DC Inverter	DC Inverter
Compressor type	W	56	76	118
Liquid pipe diameter	mm (inch)	6.35 (1/4")	6.35 (1/4")	6.35 (1/4")
Gas pipe diameter	mm (inch)	9.52 (3/8")	12.7 (1/2")	12.7 (1/2")
Plenum (type - accessory code)		2-way - 387027973	3-way - 387027974	3-way - 387027974
Diameter of the plenum ducted	mm	200	200	200
Net weight	kg	30	35	35
Net dimensions (H./W./D.)	mm	266/852/572	266/1060/572	266/1060/572
Net dimensions with plenum (H./W./D.)	mm	266/852/772	266/1060/772	266/1060/772
Remote control with receiver (supplied)		Yes	Yes	Yes
Room temperature adjustment range	°C	from +10 to +32	from +10 to +32	from +10 to +32

AD data sheet

direct-expansion indoor unit

ADIA S19 DC unit

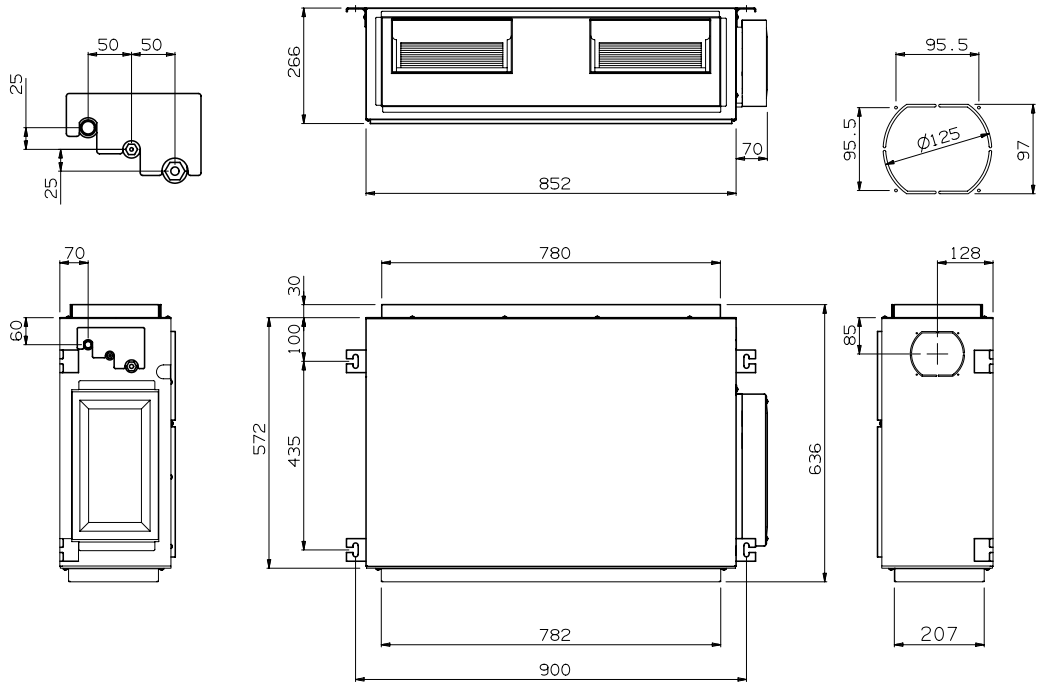

2-way Plenum

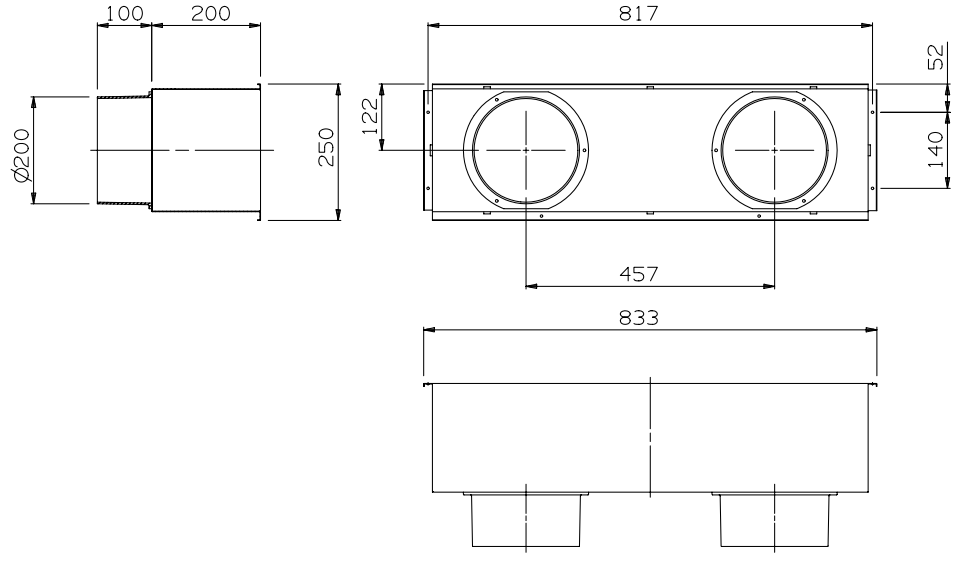

ADIB S13 DC - ADIC S13 DC units

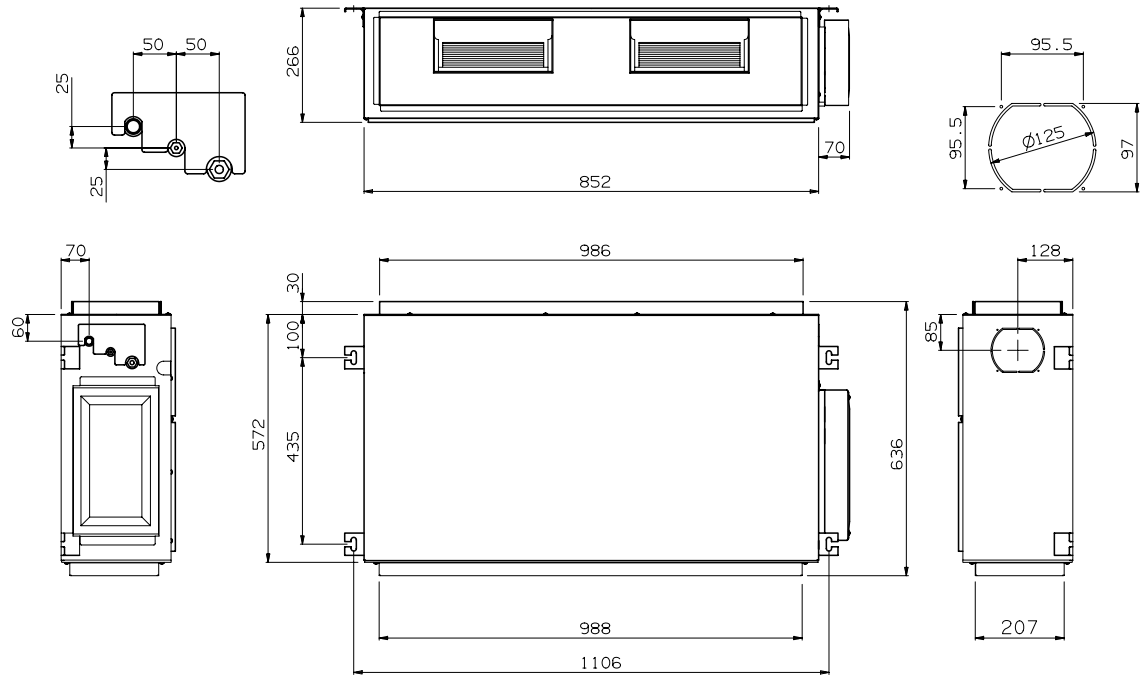

3-way Plenum

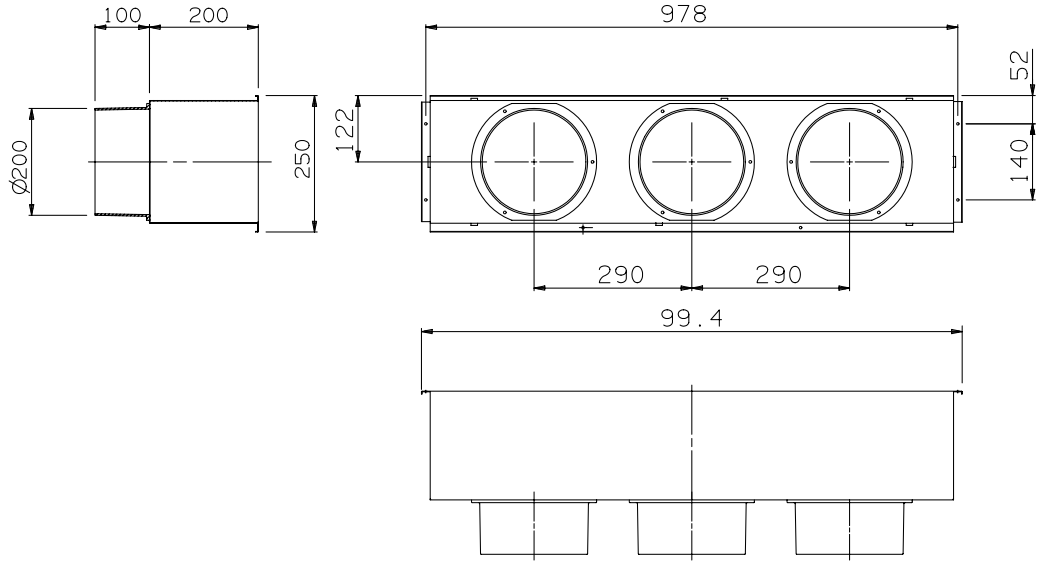

AD data sheet

direct-expansion indoor unit

ADIA S19 DC unit pressure diagram

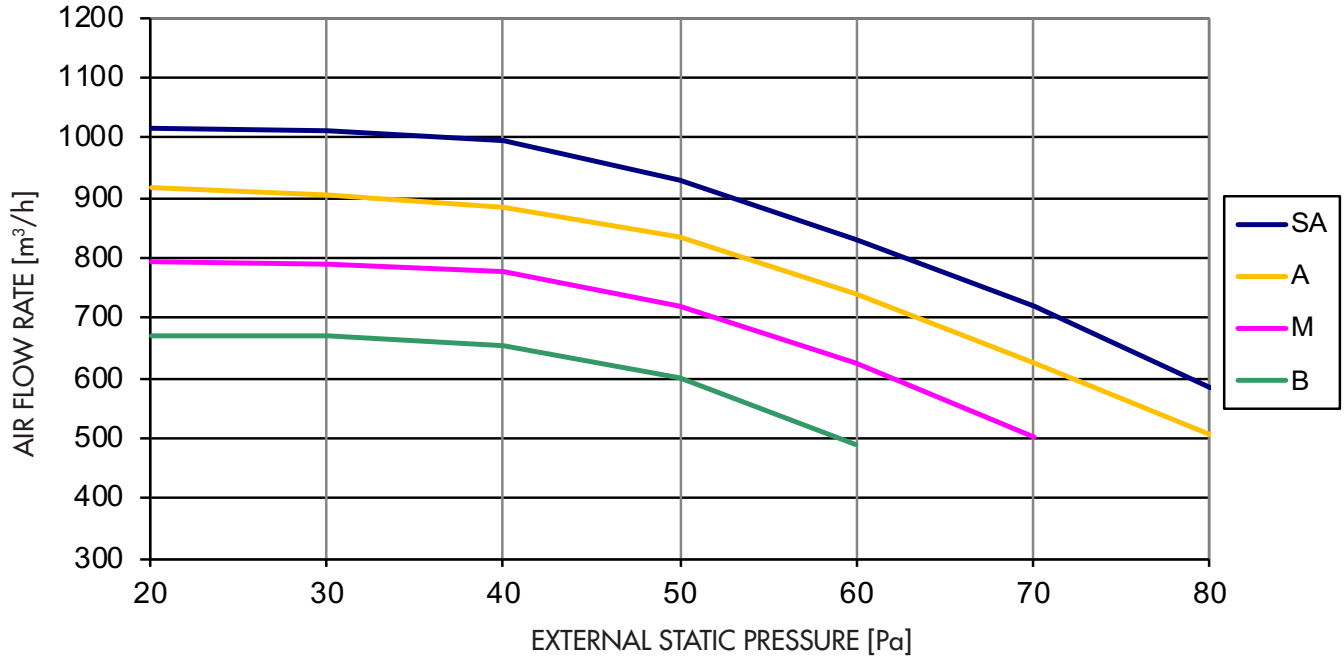

Pressure diagram of the ADIB S13 DC - ADIC S13 DC units

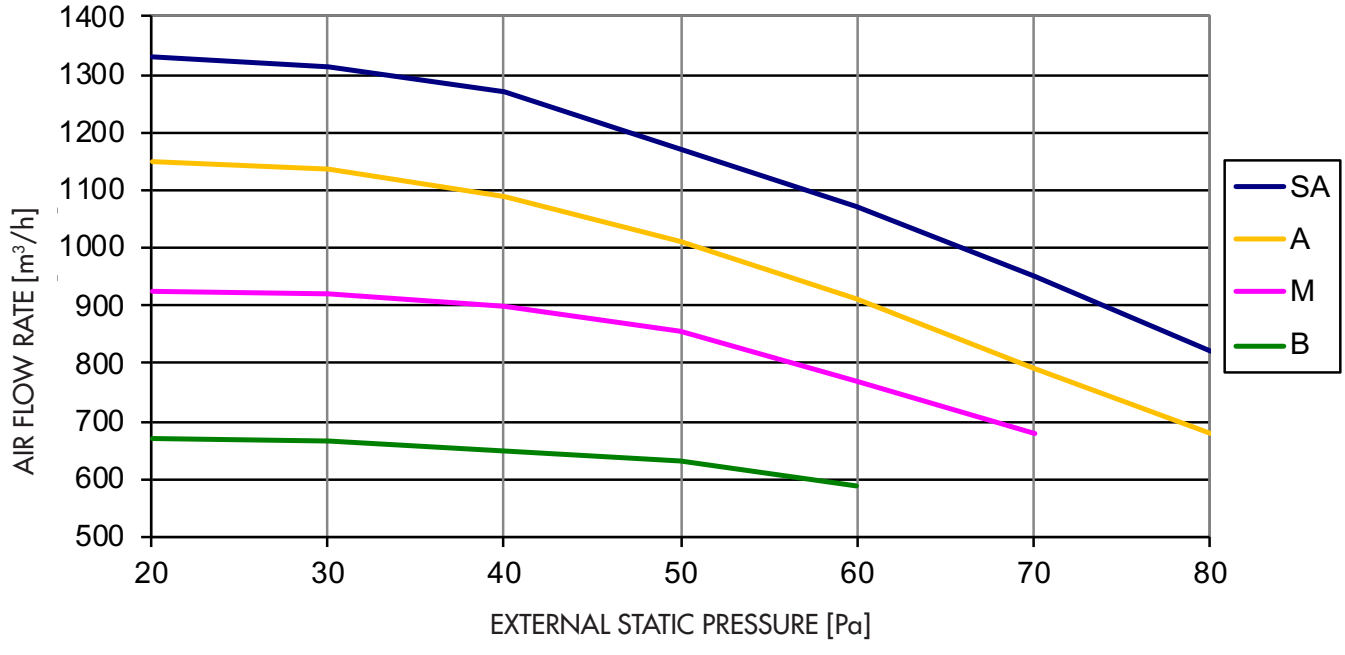

Notes

emix emix TANK

Solutions for the production of domestic hot water

argo
improve your life

EMIX and EMIX TANK - main features

The connection of EMIX/EMIX TANK with iSERIES and iM

The outdoor units from the iSERIES and IM range are fitted with a special connection port exclusively for connecting the EMIX/EMIX TANK unit via cooling pipes.

How EMIX works

EMIX does not offer an instantaneous solution for domestic hot water production, like a gas boiler, for example. For EMIX to operate correctly, it must heat the water in any type of tank, from an electric boiler to a storage tank with integration of a solar heat system. The unit will periodically sample water from the storage tank, take the temperature of the water and, if necessary, increase the temperature value until it reaches the set-point configured.
Operating one or more electric heating elements (up to three), if built-in to the storage tank, will generate an anti-legionella cycle (if required) and a back-up that can be used if fast heating is needed or in the event of a system malfunction. An optional temperature sensor can be installed in the storage tank to optimise the thermal load.

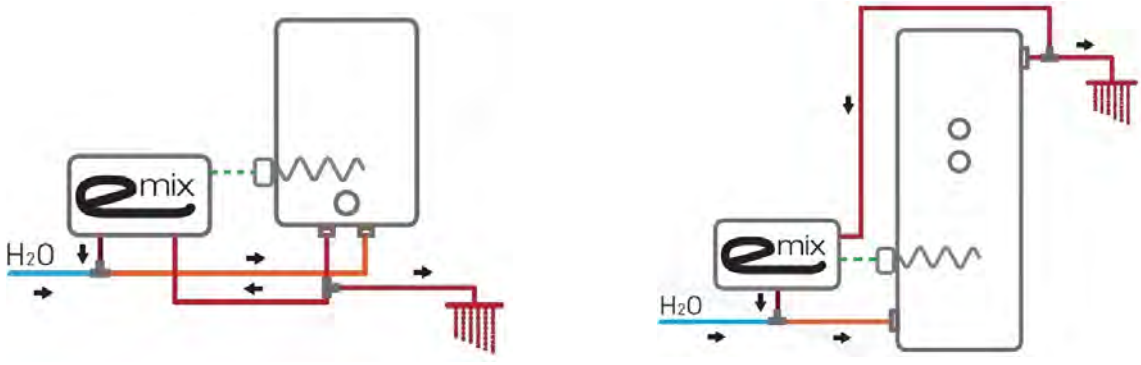

How EMIX TANK works

EMIX TANK integrates a refrigerant gas/domestic hot water heat exchanger and a glazed ceramic-coated steel storage tank all in a single solution.
The unit is fitted with two temperature sensors (which can be selected alternately) based on the set-point configured, which activate the modulating, variable speed pump. There are two electric heating elements available to produce an anti-legionella cycle (if required) and a back-up that can be used if fast heating is needed or in the event of a system malfunction. The set-up is complete with a thermostatic mixing valve to provide the correct water temperature for the user.

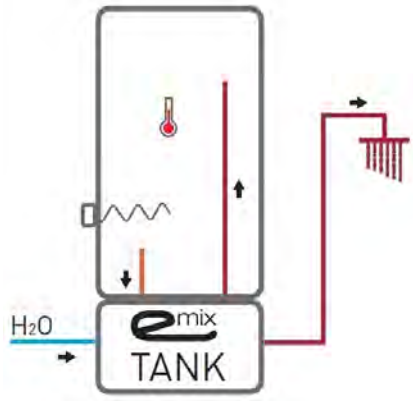

Operating mode

Setting the desired temperature (set-point) for domestic hot water is very easy. The set-point is configured using one button alone, whilst the temperature level is indicated via five green LEDs.
The EMIX/EMIX TANK regulation system will take care of the rest and will aim to meet all the heat load requirements, distributing the energy from the heat pump autonomously to ensure that the rooms are heated and that domestic hot water is produced.

Integration with solar heat systems

The solar heat systems that are specifically designed to produces domestic hot water are widely used throughout Europe (especially southern Europe).
There are two types of solar heaters; natural circulation and forced circulation.
EMIX can be connected to both of these types of systems. In this case, it will function as an integrated component, producing hot water when the efficiency of the solar panels is low (in winter or at night), or when the user's water demand becomes significant.

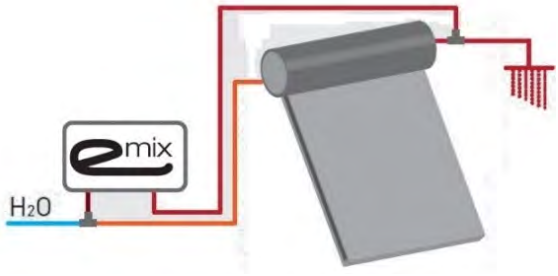

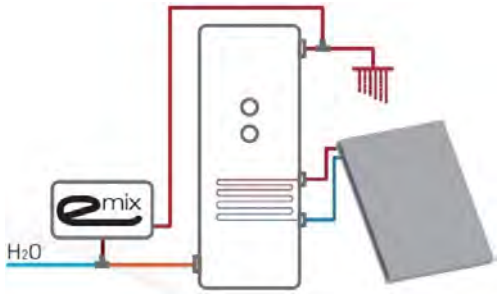

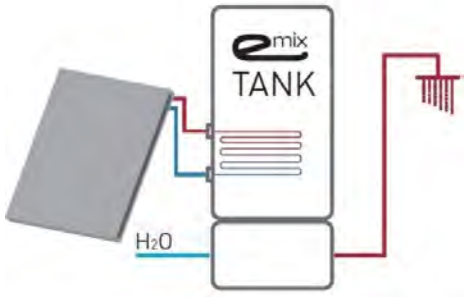

EMIX data sheet

DOUBLE WALL | EC PUMP | ELECTRIC BACK UP | iCOP

Available models

EMIX V1 is DHW module which can be combined with any tank (min. 80 L - max. 300 L) and electric boiler, and is capable of managing a backup heating element. It is provided with inverter pump and stratification sensor and it can be integrated with both natural and forced circulation solar thermal energy systems. The unit is provided with a double-wall exchanger to ensure maximum safe and purified domestic water.

Accessories (included)

- 3/4" mesh filter
- Temperature sensor

1. Refrigerant inlet from the outdoor unit (port X)
2. Refrigerant outlet to outdoor unit (port Y)
3. Domestic cold water inlet
4. Domestic hot water outlet
5. Wiring of communication cables
6. Wiring of power cables (power cords)

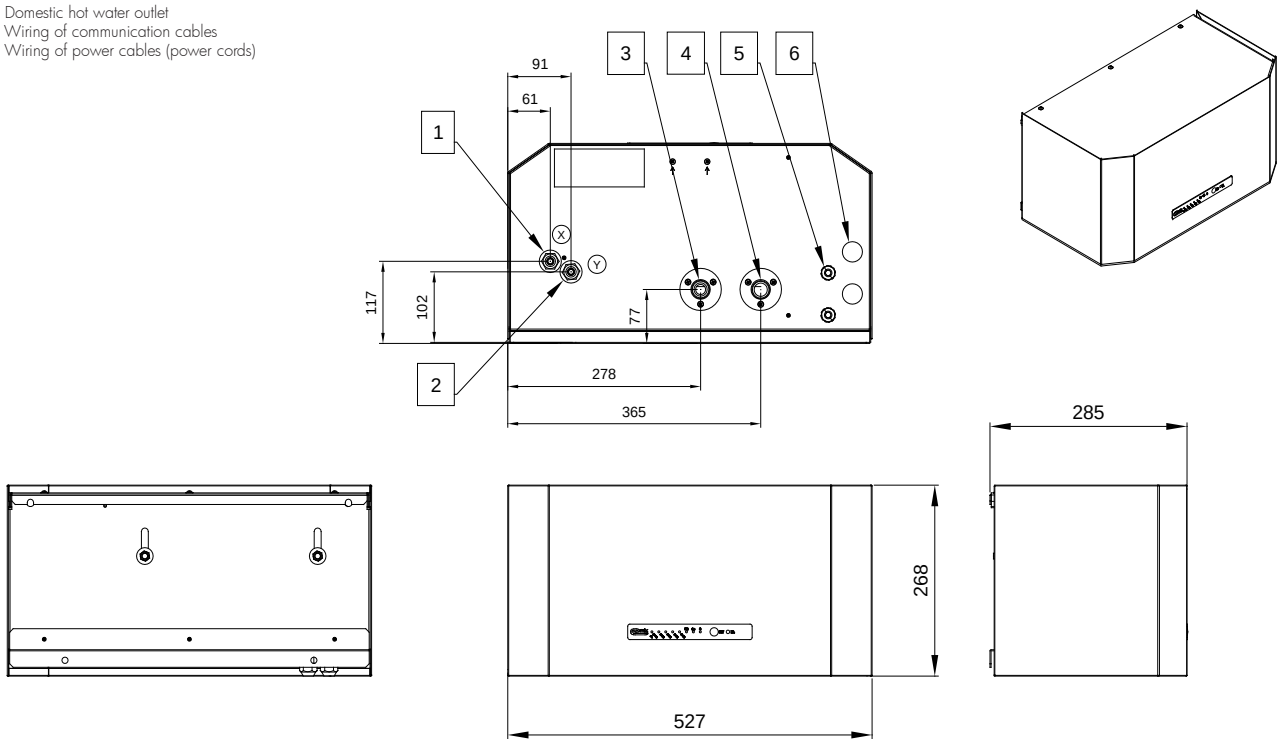

MODEL		EMIX V1
Electrical power supply	V/Ph/Hz	230/1/50
Minimum power / current input	W/A	15 / 0,20
Maximum power / current input	W/A	70 / 0,53
Hydraulic connections	inch	3/4" - 3/4" (1/2"-1/2" for AEI1G140EMX)
Gas connections	inch	3/8" - 3/8"
Net weight I.U.	kg	16,5
Net dimensions I.U. (H./W./D.)	mm	268/527/285
Additional heater	kW	activation only
Recommended water flow rate	L/min	10-12
Maximum operating pressure	bar	6
Sound power level	dB(A)	35

MODEL		EMIX V1			
Connected to		**AEI1G65EMX**	**AIM06EMX**	**AEI1G80EMX**	**AIM08EMX**
ERP class (*)	-	A	A	A	A
Load profile (tapping)	-	L	L	XL	XL
Reference DHW tank volume	L	200	200	300	300
Water heating energy efficiency (**)	ηWH	104	105	116	106
Annual energy consumption (**)	kWh	981	972	1447	1587
COPDHW	-	2.51	2.51	2.78	2.56
Heating-up time (from 10 °C)	h:m	02:36	3:09	3:04	3:33
Final reference water temperature	°C	50	50	48	48
Maximum quantity of mixed water at 40 °C	l	240	240	354	354

(*)with test method according to EN 16147

(**) Average season

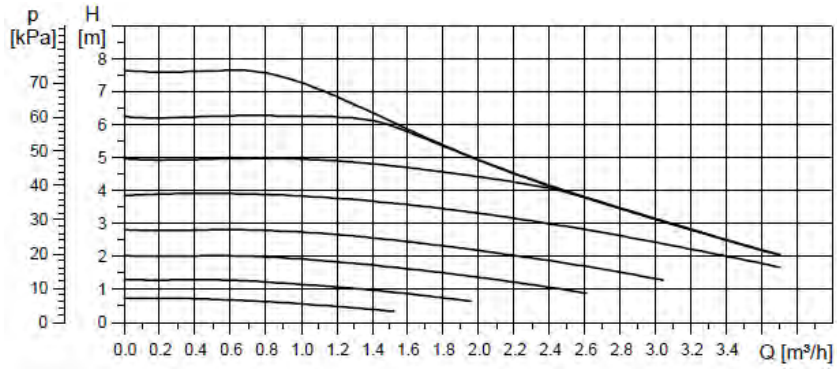

Operating curve of Emix tank

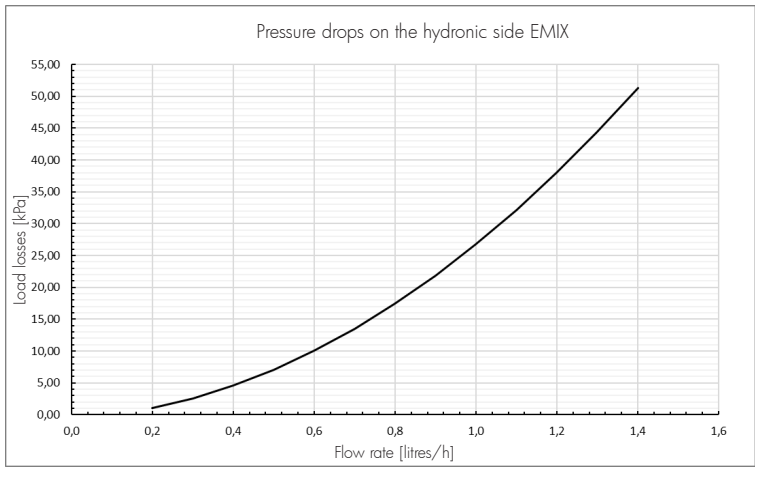

Recommended design flow rate: 10-12 l/min

EMIX installation diagrams

Diagram 1

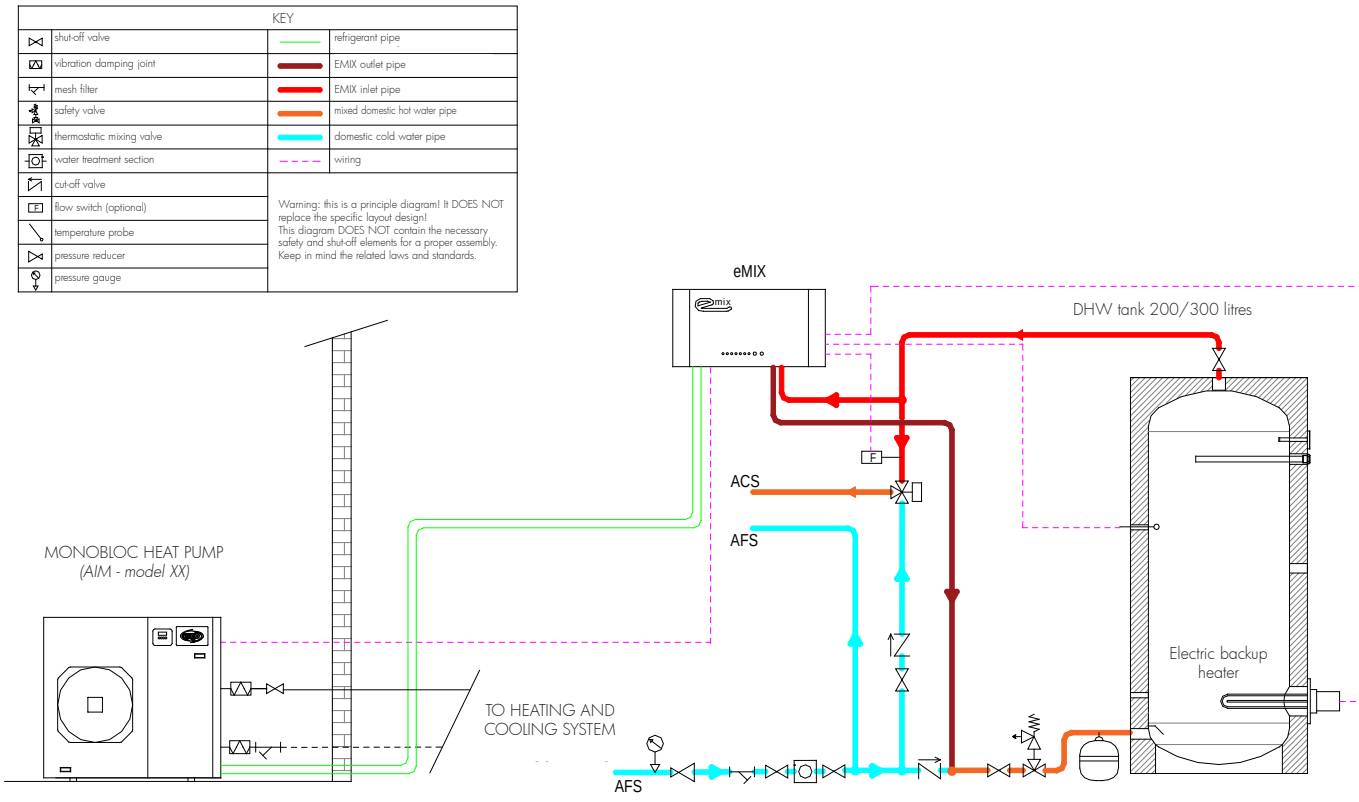

Diagram showing EMIX coupled with a domestic hot water tank with electric backup heater, managed directly by EMIX. Stratification DHW sensor and flow switch (optional) to optimise the anti-legionella cycle. The EMIX is connected to an iM heat pump.

Diagram 2

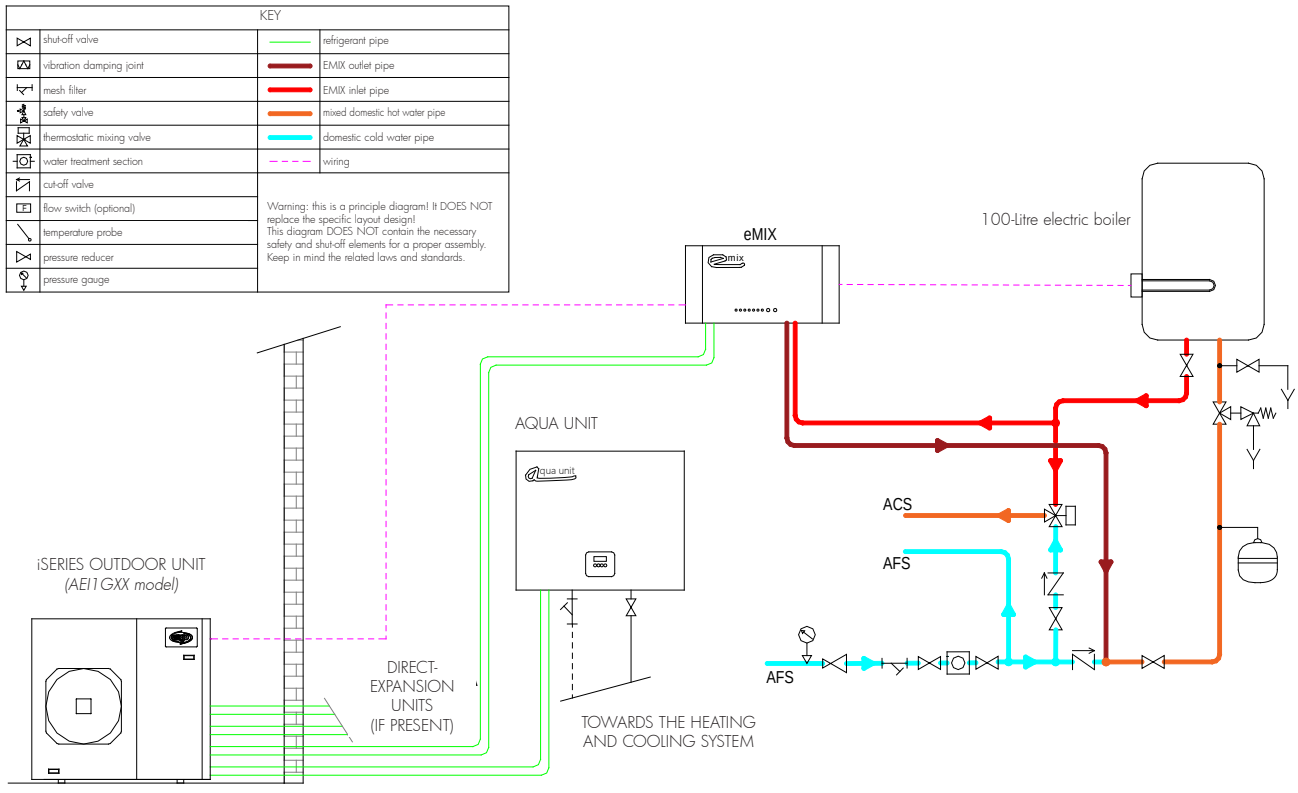

Diagram showing EMIX supplied by a small domestic hot water storage tank with suitable electric heating element, operated directly by EMIX. DHW temperature management by periodic sampling of stored water. The EMIX is connected to an iSERIES system outdoor unit.

EMIX TANK data sheet

EMIX TANK 200 V2

EMIX TANK 300 V2

DOUBLE WALL | EC PUMP | ELECTRIC BACK UP | iCOP

Available models

EMIX TANK 200 V2 and EMIX TANK 300 V2, with the same features as the EMIX but fitted inside a rectangular white metal chassis, with a built-in ceramic-coated tank with a 200/300-litre capacity, suitable for domestic hot water, provided with backup heater, circulation pump and solar exchanger for connection to third-party solar panels.

1. Solar thermal energy exchanger inlet
2. Solar thermal energy exchanger outlet
3. Domestic cold water inlet
4. Domestic hot water outlet
5. Safety valve
6. Refrigerant gas inlet
7. Refrigerant gas outlet
8. Solar thermal energy sensor probe
9. Control panel
10. Magnesium anode
11. Electric backup heater
12. Temperature sensors
13. Thermostatic mixing valve

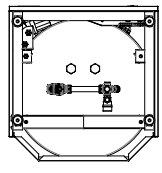

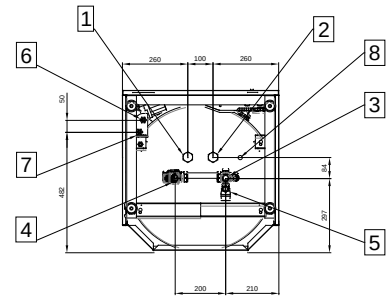

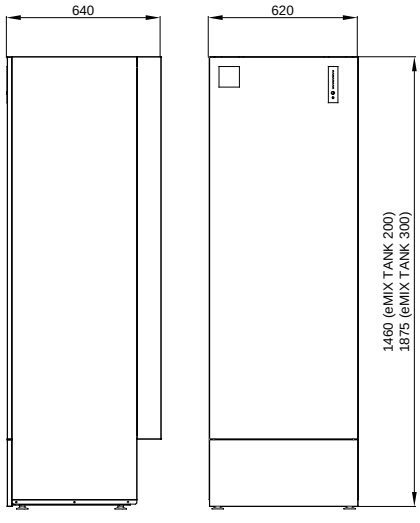

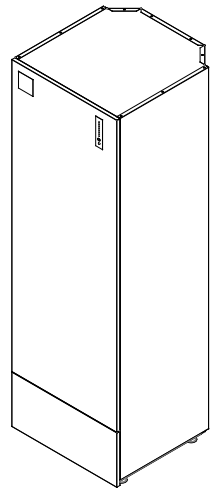

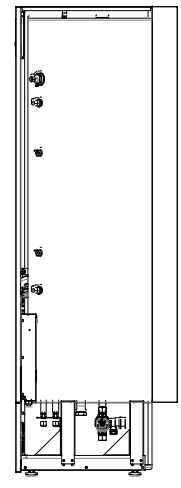

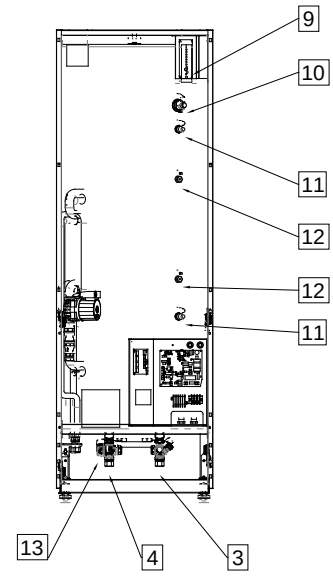

MODEL		EMIX TANK 200 V2	EMIX TANK 300 V2
Electrical power supply	V/Ph/Hz	230/1/50	
Maximum power input (without electric heater)	W	60	
Maximum power input (with electric heater)	W	2000	
Hydraulic connections	mm	Ø 22	
Gas connections	inch	3/8" - 3/8" (1/2" - 1/2" for AEI 1G140 EMX	
Solar thermal energy exchanger connections	inch	G 1"	
Maximum refrigerant pipe length	m	10	
Maximum height difference between indoor unit and outdoor unit	m	10	
Maximum height difference to other iSERIES indoor units	m	5	
Additional gas charge (if required)	g/m	15 for pipes G 3/8" - G 3/8" (20 for G1/2" - G1/2"	
Tank volume	l	200	300
Net weight	kg	103	133
Weight with packaging	kg	115	145
Net dimensions (H./W./D.)	mm	1460/620/640	1875/620/640
Maximum operating pressure (PSV set)	bar	6	
Sound power level	dB(A)	35	

MODEL		EMIX TANK 200 V2			
Connected to		**AEI1G42EMX**	**AEI1G50EMX**	**AEI1G65EMX**	**AIM06EMX**
ERP class (*)	-	A	A	A	A
Load profile (tapping)	-	L	L	L	L
Water heating energy efficiency (**)	ηWH	106	105	104	105
Annual energy consumption (**)	kWh	967	979	981	972
COPDHW	-	2.54	2.53	2.51	2.51
Heating-up time (from 10 °C)	h:m	2:51	2:47	2:36	3:09
Final reference water temperature	°C	50	50	50	50
Maximum quantity of mixed water at 40 °C	l	240	240	240	240

(*)with test method according to EN 16147
(**) Average season

MODEL		EMIX TANK 300 V2					
Connected to		**AEI1G80EMX**	**AIM08EMX**	**AEI1G110EMX**	**AIM11EMX**	**AEI1G140EMX**	**AIM14EMX**
ERP class (*)	-	A	A	A	A	A	A
Load profile (tapping)	-	XL	XL	XL	XL	XL	XL
Water heating energy efficiency (**)	ηWH	116	106	106	106	112	105
Annual energy consumption (**)	kWh	1447	1587	1581	1586	1490	1601
COPDHW	-	2.78	2.56	2.57	2.55	2.71	2.51
Heating-up time (from 10 °C)	h:m	3:04	3:33	2:47	2:25	2:08	2:24
Final reference water temperature	°C	48	48	48	48	48	48
Maximum quantity of mixed water at 40 °C	l	354	354	354	354	354	354

(*)with test method according to EN 16147
(**) Average season

Solar thermal energy exchanger pressure drops

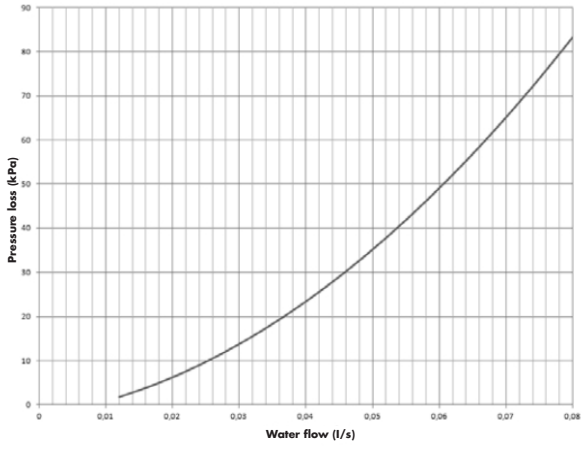

(*) EN 16147
(**) average season

Exchanger surface area: 1.4 m²

EMIX TANK installation diagrams

Diagram 1

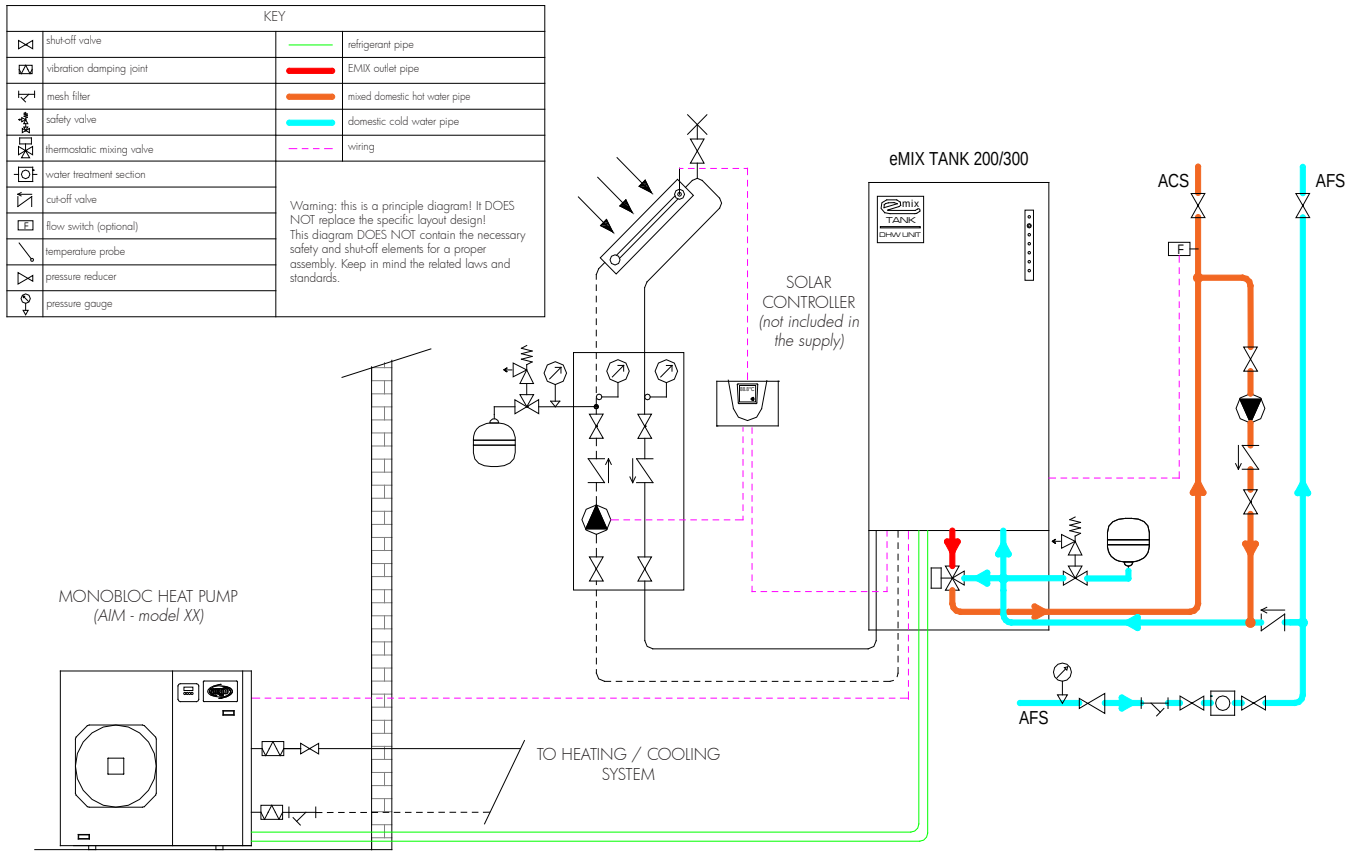

Diagram showing EMIX TANK connected to an iM heat pump.
Flow switch (optional) to optimise the anti-legionella cycle and connection to a solar thermal system (not in our scope of supply).

Diagram 2

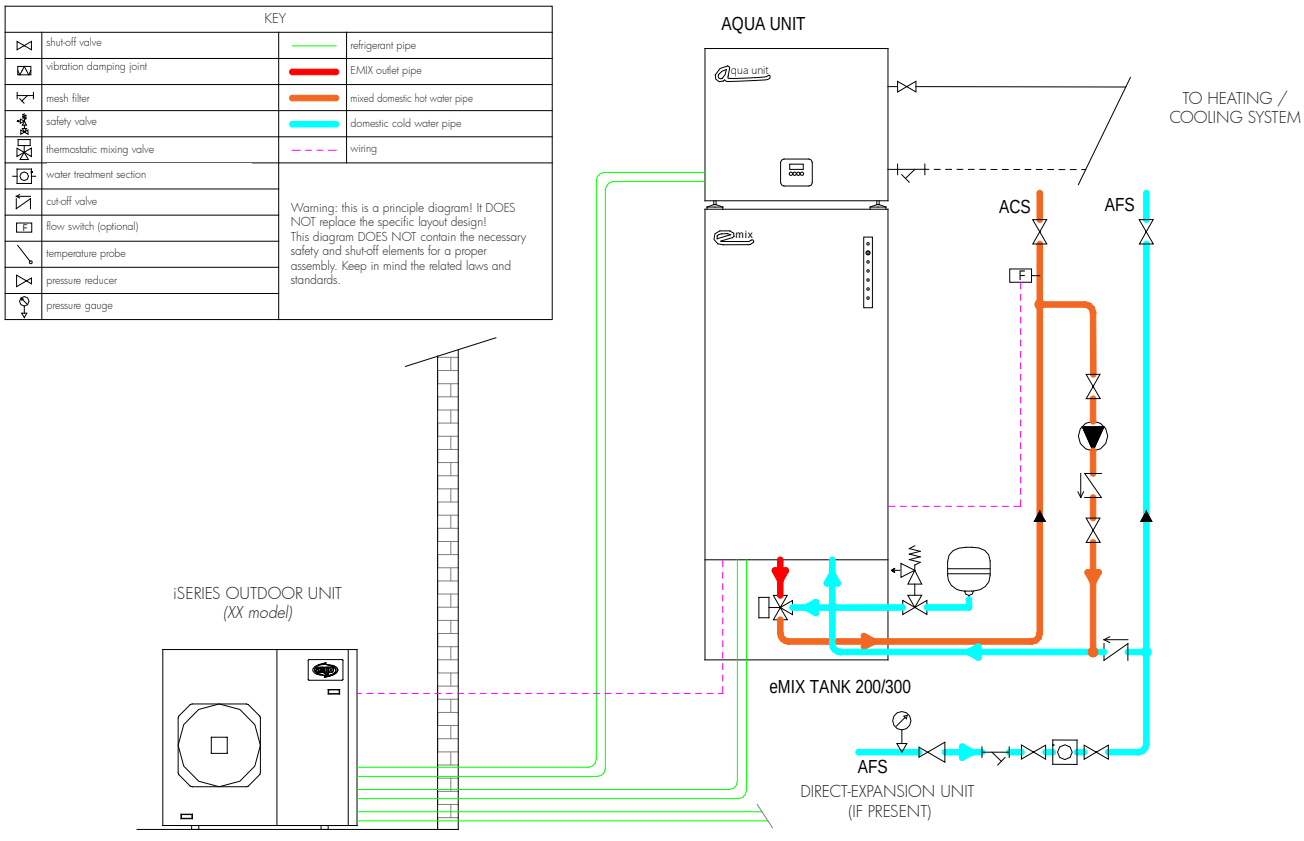

Diagram showing EMIX TANK connected to an iSERIES system.
The AQUA UNIT module easily and practically fits on top of the EMIX TANK, reducing the installation space.
Flow switch (optional) to optimise the anti-legionella cycle.

accessories

Accessories for iM and iSERIES

THE DHW KIT

The DHW KIT provides domestic hot water using the iM unit and AQUA UNIT (as an alternative to EMIX/EMIX TANK) and handles the switching of the heat energy supply from the system to a specific storage tank.
The kit, therefore, consists of a domestic hot water 300-litre tank (with internal exchanger suitable for heat exchange with a heat pump), a 3 kW heating element, a control panel with temperature probe and a diverter valve. In addition, it features extended functions such as the anti-legionella cycle management, a backup if provided and the domestic water recirculation function.

The DHW KIT can be used on monobloc units and on split units, with the following operating modes.

DHW KIT with M monobloc units

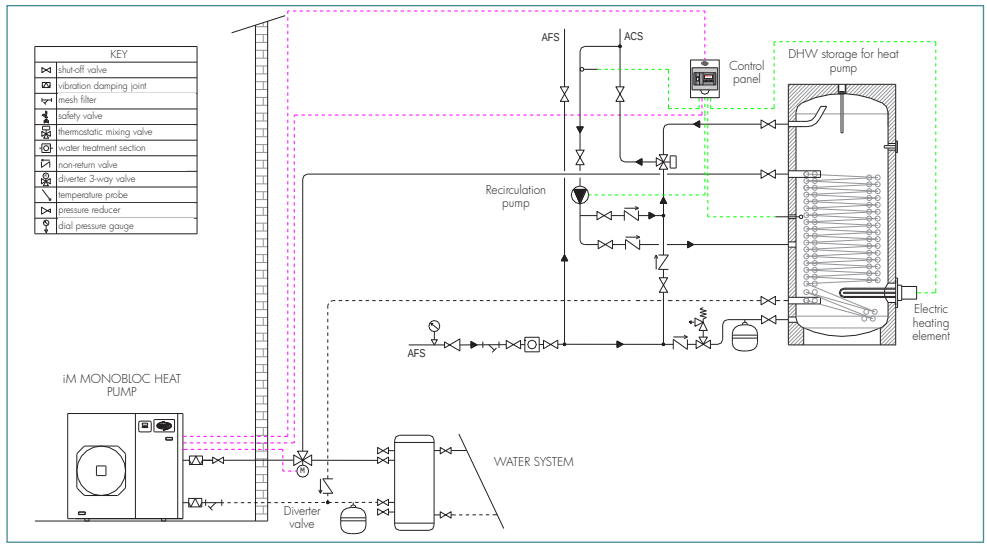

DHW KIT with iSERIES split unit

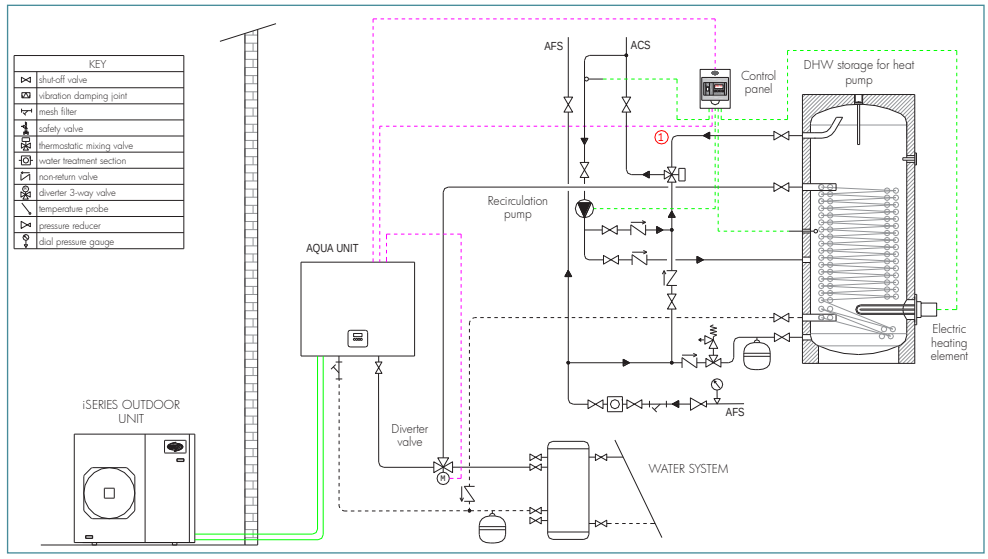

1 The control panel

The control panel of the DHW KIT is an electronic device installed in a special electric panel for the control and management of the domestic hot water production in the iM/iSERIES systems. The unit is capable of controlling a heat pump and a heating element (up to 4 kW) using them to activate the multiple functions and optimising energy consumption.

What the system can do:
- produce domestic hot water in a storage tank using a heat pump and/or a heating element;
- control the recirculation pump of the domestic water circuit;
- control the anti-legionella cycle;
- control the SMART-ENERGY algorithm (under development);
- anti-freeze protection;
- manage any alarm/unavailability of the heat pump.

Reference wiring diagram

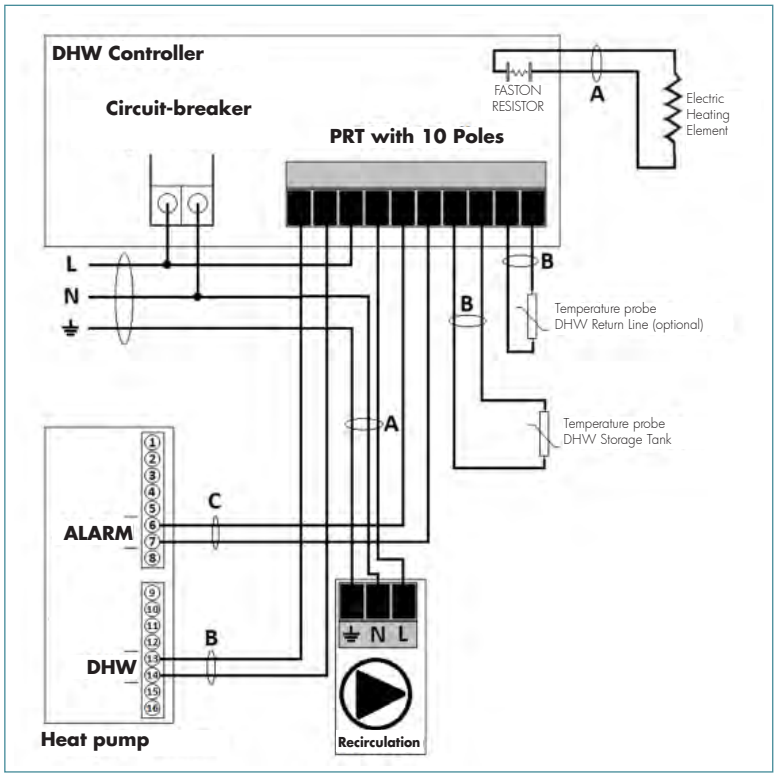

Control panel technical data

ELECTRICAL SPECIFICATIONS	
Voltage	230 VAC
Power consumption	7 VA
Total breaking capacity	460 VA (relay outputs 1-153)
Breaking capacity per relay	460 VA for R1/185 W
Internal fuse	5 A delayed
Protection category	IP40
Protection class	II
Measuring range	-40 °C up to 110 °C
PERMITTED CLIMATIC CONDITIONS	
Room temperature for a correct operation	0 °C/40 °C
Ambient temperature for transportation/storage	0 °C/40 °C
Room humidity for a correct operation	85% UR with DBT 25 °C
Ambient humidity for transportation/storage	85% UR with DBT 25 °C
OTHER SPECIFICATIONS	
Casing	Plastic ABS
Type of installation	Wall-mounting
Total dimensions	200 mm x 147 mm x 95 mm
Display	LED display 7 seg. 3 digits
	4 LEDs (red, yellow, green and white)
Programming	4 buttons

2 The diverter valve

The diverter valve consists of 2 elements: the valve body and the servomotor, supplied separately.

Dimensions (in mm)

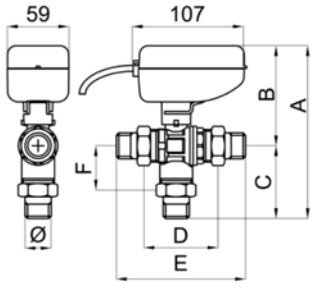

ND	Ø OUTLETS	Ø VALVE BODY	A	B	C	D	E	F
20	3/4"	1"	170	100	70	67	128	40

Servomotor characteristics

TECHNICAL SPECIFICATIONS	
Electric control	3 points
Valve body connection	quick fitting
Operating mode	ON/OFF
Rotation	90° clockwise and anticlockwise
Internal fuse	5 A delayed
Position indicator	rotating arrow which indicates the position of the sphere
Motor	bidirectional
Electrical power supply	230 VAC - 50/60 Hz
Power cable length	80 cm
Diverting time and related starting torque	15 seconds - 5 Nm
Power usage	3.9 VA
Phase electric capacity in output to grey wire	1 A resistive
Electric capacity of the supplementary micro-switch	1 A resistive - 250 V
Indoor operating temperature	+5 °C to +50 °C
Protection degree	IP 54
Insulation class	II - double insulation
External casing material	polyamide PA 6, 30% glass fibre
Certification	EC

Accessories for iM and iSERIES

Valve body characteristics

The main characteristic of the valve body is the presence of a 3-hole sphere, which has a hole directed to the common way (always open) and two other orthogonal holes to the first and between them.
When one of the last two holes is positioned on one of the two inlet ways, the second way is closed. The sphere turns 90° and the second hole is directed onto the second inlet way, thus closing the first. The 3-way valve body includes a condition in which the 3 ways are simultaneously communicating with one another while the sphere is rotating to switch from one position to the other. When the rotation completes, the valve goes completely back to its diverter function.

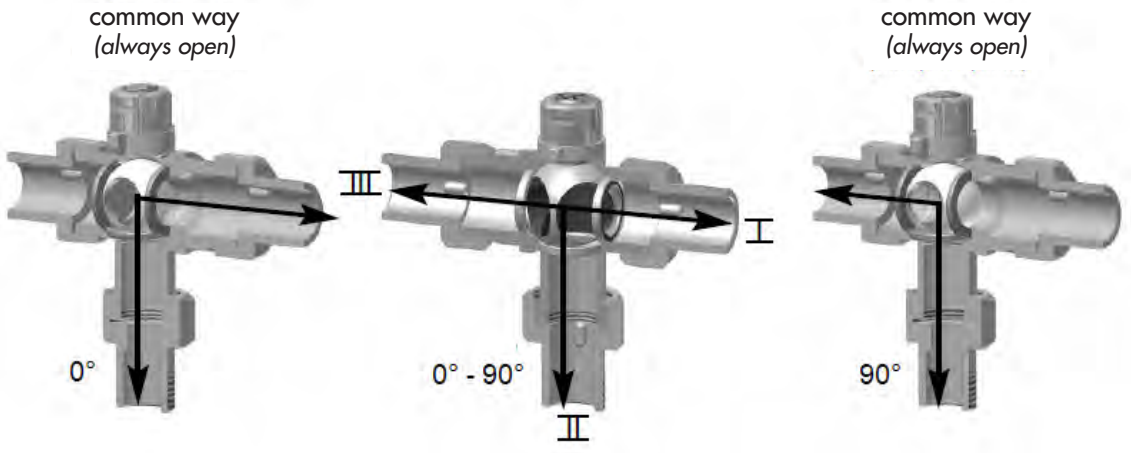

TECHNICAL SPECIFICATIONS	
Type	3-way vertical, diverter
Body dimensions	1" total flow
Valve body material	brass CW617N UNI EN 12165
Sleeve material	brass CW617N UNI EN 12165
Sphere material	brass CW617N UNI EN 12165
Seal material	P.T.F.E.
Kvs	18.3 m3/h
Nominal operating pressure	30 bar
Maximum pressure differential	16 bar
Minimum fluid temperature	+5 °C
Maximum fluid temperature	+160 °C
Suitable fluid	water and fluids compatible with EPDM and P.T.F.E.

3 Domestic hot water tank

The tank mod. TANK 300L IM AU is designed to store domestic hot water and can be used for homes and light commercial spaces, etc.
The tank is provided with a single fixed exchanger with a high-exchange-surface double coil, and is therefore particularly suitable to be combined with the use of heat pumps.
The tank is available with a domestic hot water storing capacity of 300 litres.
Water can be heated by connecting the exchanger to the primary source (heat pump, boiler...).
The tank can be used only if positioned vertically.
The tank is made in carbon steel sheet and is protected on the inside with an anti-corrosive ceramic coating (ceramic glaze fired at a temperature of 850 °C) as provided by current standards.
The heat insulation is made in injected rigid high-density polyurethane 50 mm thick, with external finish in soft coloured PVC. The tank is fitted with a magnesium anode located at the centre of the top back-case.
Tank can also be equipped with an additional heating element which is not supplied with the product. The product comes with height-adjustable feet. The tank can be directly connected to the water mains only with a pressure lower than 1 MPa (approx. 10 bar).

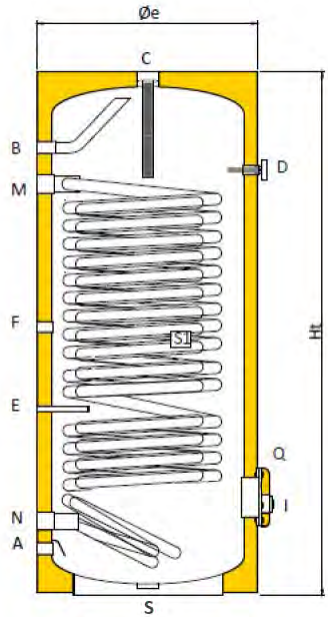

Key

A = domestic cold water inlet
B = domestic hot water outlet
C = anode
D = dial thermometer
E = thermostat/temperature probe
F = recirculation
I = electric heating element
M = exchanger inlet
N = exchanger outlet
Q = inspection door
S = drain
S1 = exchanger

Capacity [litres]	Ø e [mm]	Ht [mm]	A [mm]	B [mm]	D [mm]	E [mm]	I [mm]	F [mm]	M [mm]	N [mm]
300	670	1450	130	1245	1175	560	770	270	1035	215

Characteristics of the internal exchanger

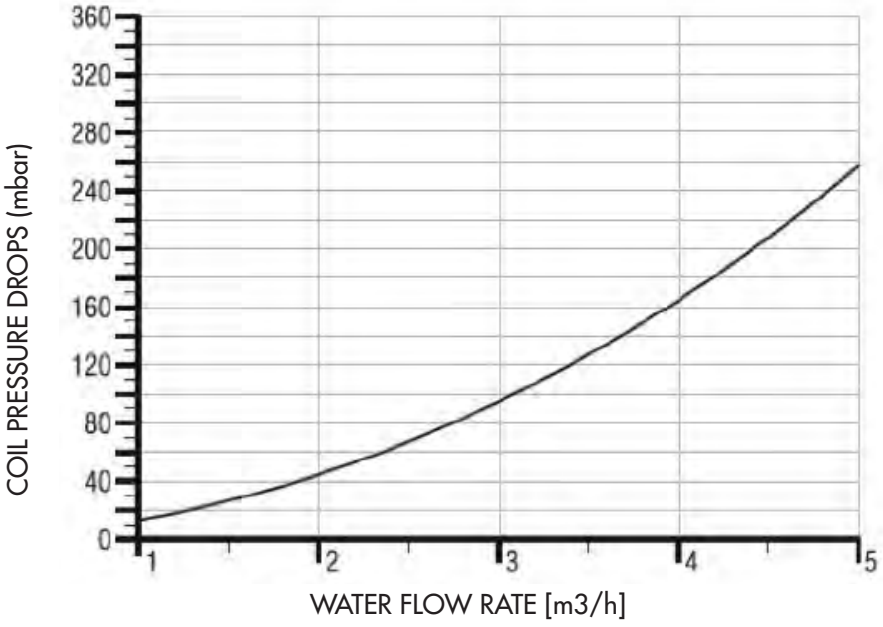

Reference value table:

Water flow rate [m³/h]	**1**	**2**	**3**	**4**	**5**
Pressure drops [mbar]	12	44	86	165	250

4 Electric heating element

The 3 kW heating element is used in the domestic hot water storage tank as an integrative element and as a backup if needed.

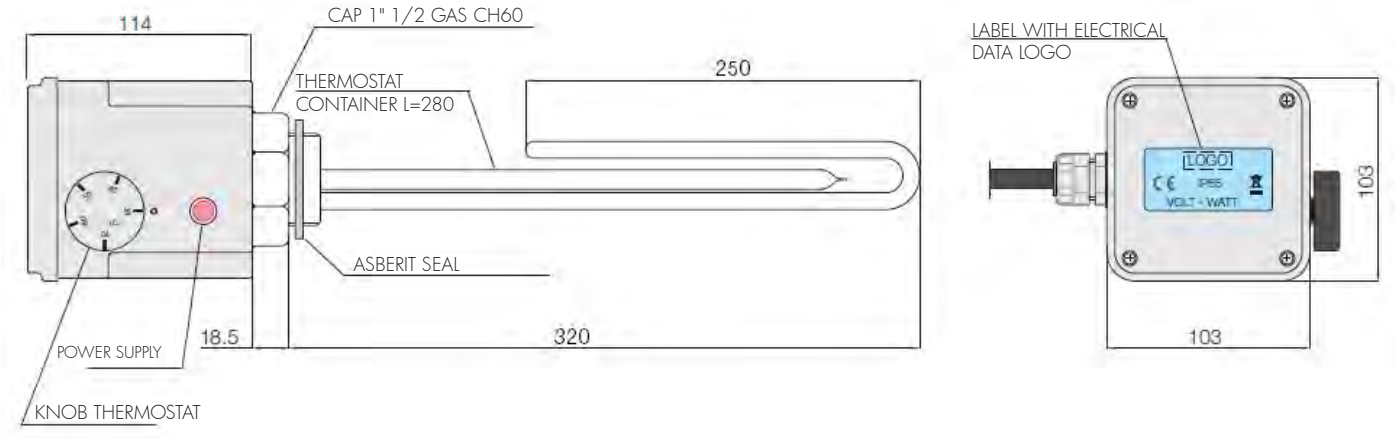

TECHNICAL SPECIFICATIONS	
Nominal output	3 kW
Version	MgO
Class	I
Outdoor diameter	8.5 mm
Power supply voltage	230 V
Maximum specific load	13 W/cm2
Seal material	AISI 316L
Threaded cap	1"1/2 gas in AISI 304
Protection cover	PP V0 IP 65
Temperature regulation	thermostat 30 - 70 °C
Safety	thermostat 90 °C
Wiring	Cable in PVC 3x1.5 mm2
Approvals	EC
Tests	EN 60335-1, EN 50106

Accessories for iM and iSERIES

Buffer tanks/hydraulic circuit breaker

The MINI PUFFER series includes indoor wall-mounted tanks for air-conditioning and heating systems, available in two different capacities, 40 litres and 80 litres.
They are particularly suitable to be combined with reversible heat pumps acting as hydraulic circuit breaker (by making the various circuits of the system independent) and as thermal flywheel (minimising the start-ups and ensuring the minimum water supply for the correct operation of the heat pump).
The MINI PUFFER tanks are provided with additional connections for the integration of an additional auxiliary source.

Key of connections

E: temperature probe if provided
I: electric heating element
G2/G1: system oulet/inlet
P4/P3: generator oulet/inlet
P2/P1: auxiliary generator oulet/inlet
S: drain
T: vent

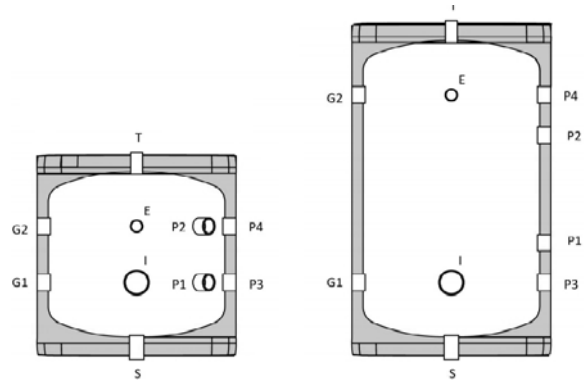

Dimensions (in mm)

40 litres

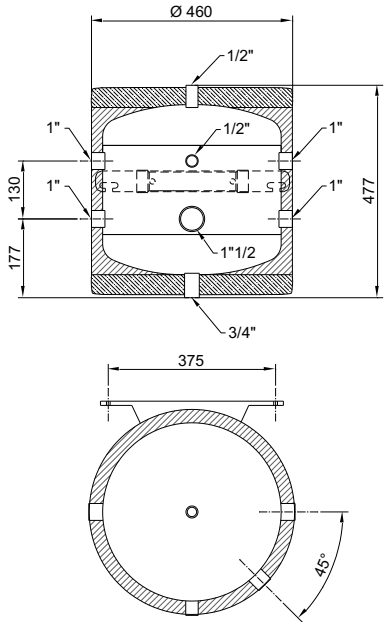

80 litres

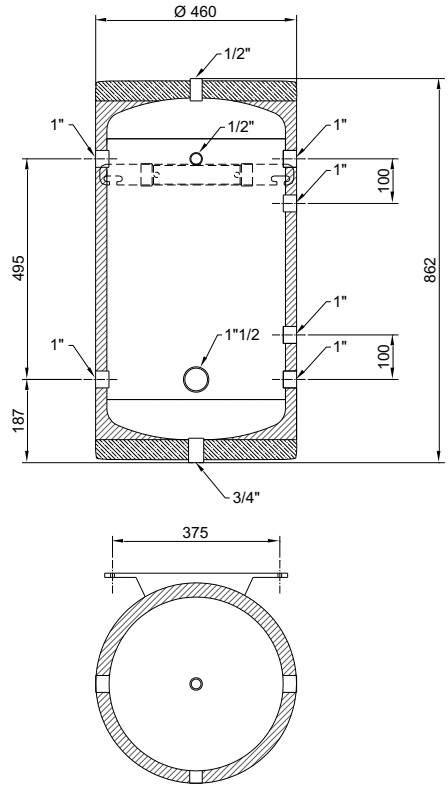

Technical specifications

TECHNICAL SPECIFICATIONS	
Volume	40 and 80 litres
Material	Carbon steel
Covering	white galvanised sheet metal
Thermal insulation	High-density polyurethane foam
Minimum operating temperature	-10 °C
Maximum operating temperature	90 °C
Maximum operating pressure	6 bar
Energy class	B

Remote panel for iM

The remote control panel can be installed on the units in combination with the existing one and provides for the same functions (it is NOT a room temperature probe).
The panel requires a separate 12 VDC power supply (by external feeder).

Dimensions (in mm)

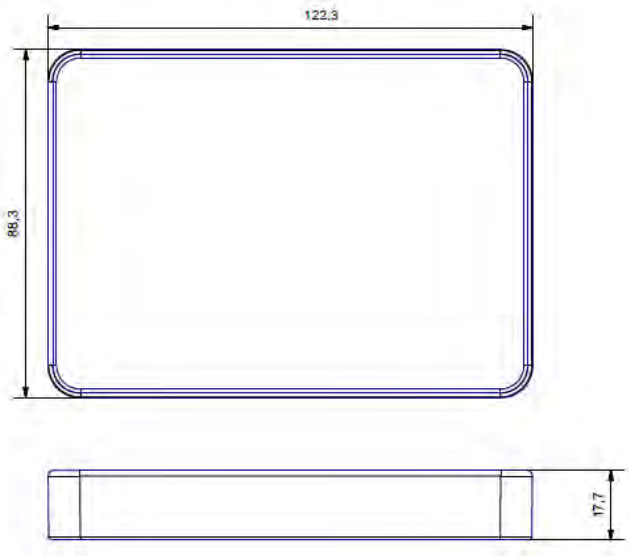

Installation

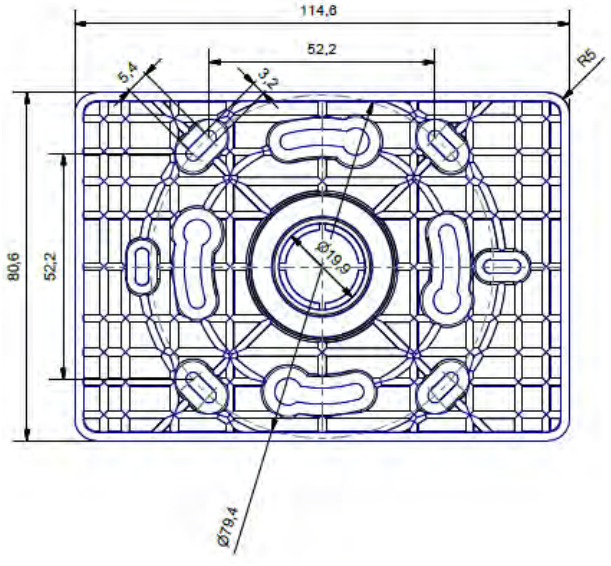

- Directly in the hole on the wall
- On electrical box mod. 503
- On circular electrical box

Accessories for iM

The gateway modbus - iModbus

iMODBUS is an communication device between the iM heating, cooling and DHW units and remote control systems using the MODBUS protocol.
iMODBUS uses the industrial MODBUS protocol for a simple and reliable connection to external monitoring systems.
The device is fitted with two types of MODBUS ports (RS232 and RS485) and has the size of two DIN modules.

THE GATEWAY

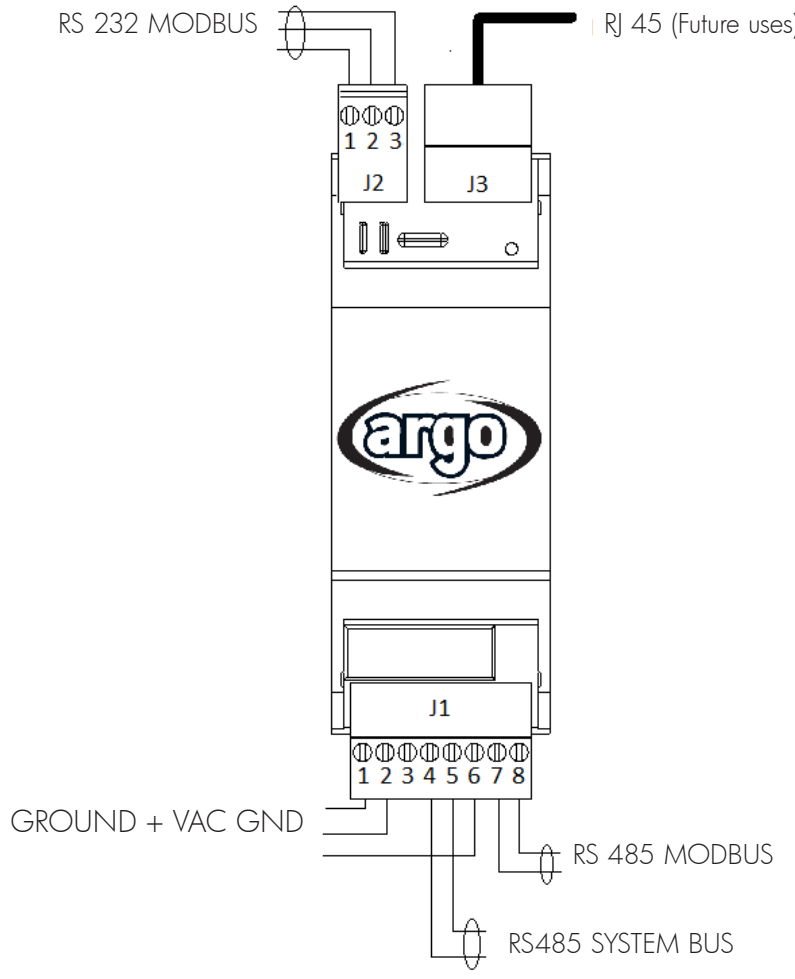

CONNECTIONS

The gateway provides several reading, and reading and writing parameters in order to ensure an efficient and accurate management of the iM units.
Detailed specifications can be found in the installation manual provided with the device.

Notes

iM - examples of installation diagrams

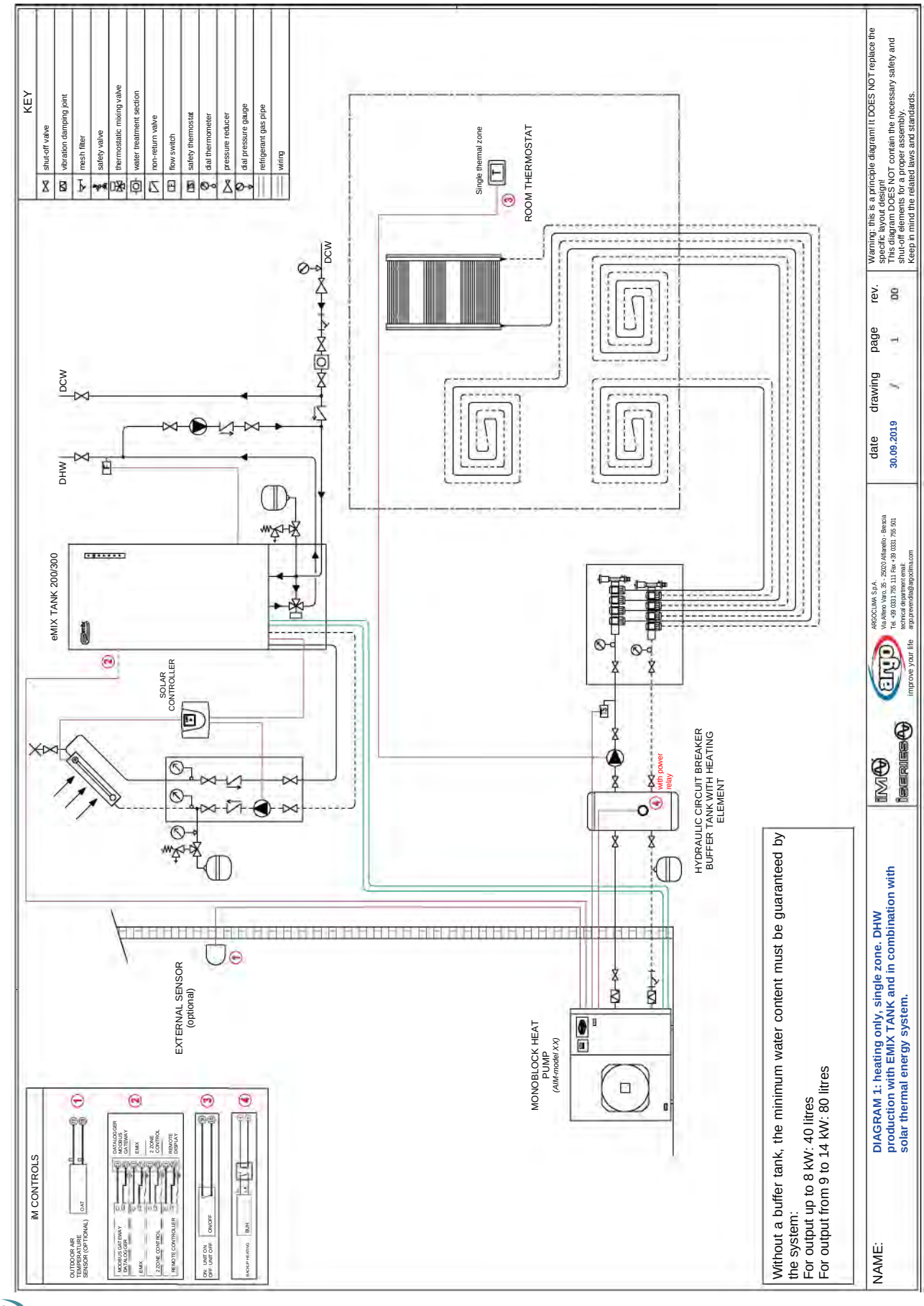

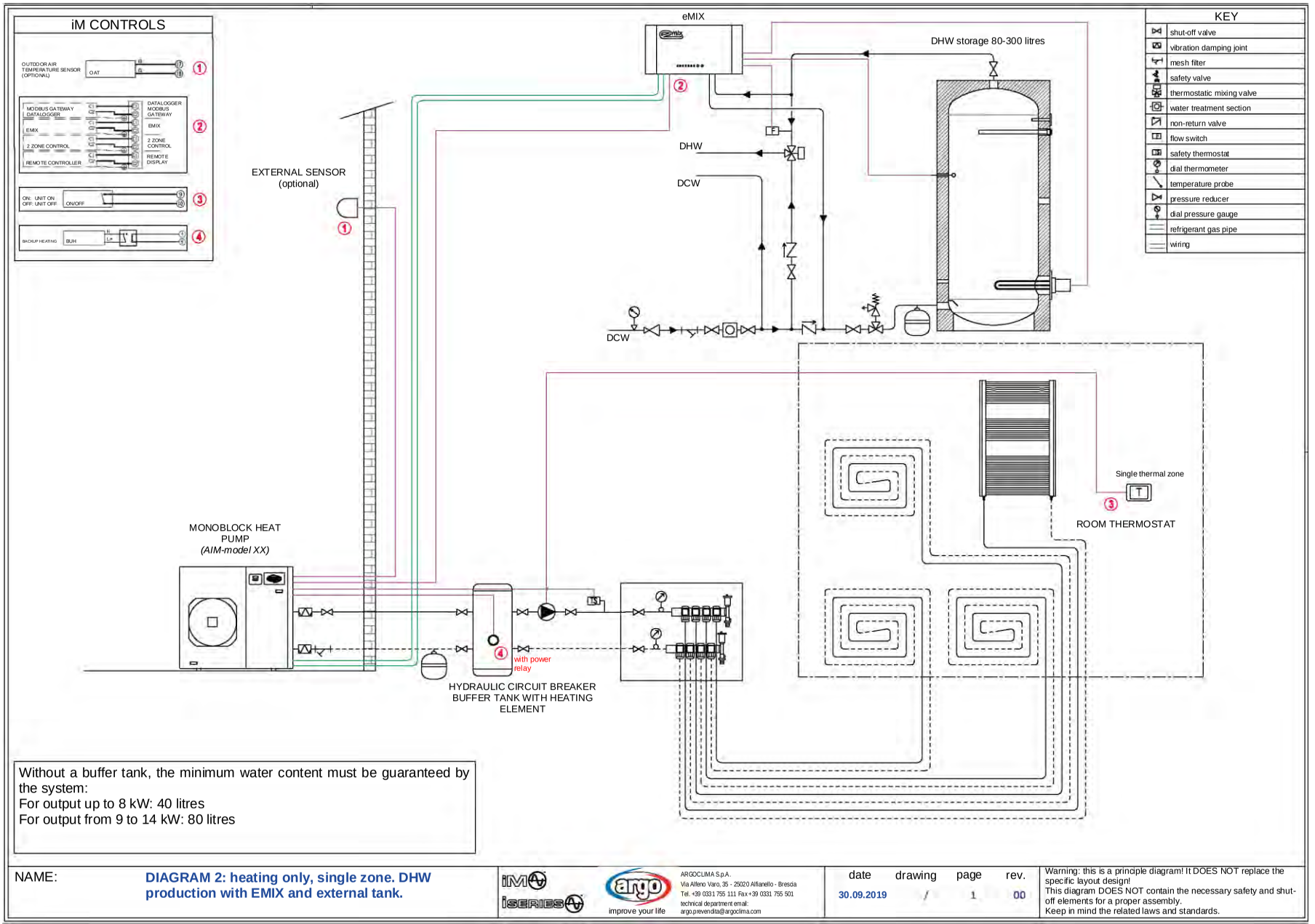

Without a buffer tank, the minimum water content must be guaranteed by the system:
For output up to 8 kW: 40 litres
For output from 9 to 14 kW: 80 litres

NAME: **DIAGRAM 2: heating only, single zone. DHW production with EMIX and external tank.**

improve your life

ARGOCLIMA S.p.A.
Via Alfeno Varo, 35 - 25020 Alfianello - Brescia
Tel. +39 0331 755 111 Fax +39 0331 755 501
technical department email:
argo.prevendita@argoclima.com

date	drawing	page	rev.
30.09.2019	/	1	00

Warning: this is a principle diagram! It DOES NOT replace the specific layout design!
This diagram DOES NOT contain the necessary safety and shut-off elements for a proper assembly.
Keep in mind the related laws and standards.

improve your life

iM - examples of installation diagrams

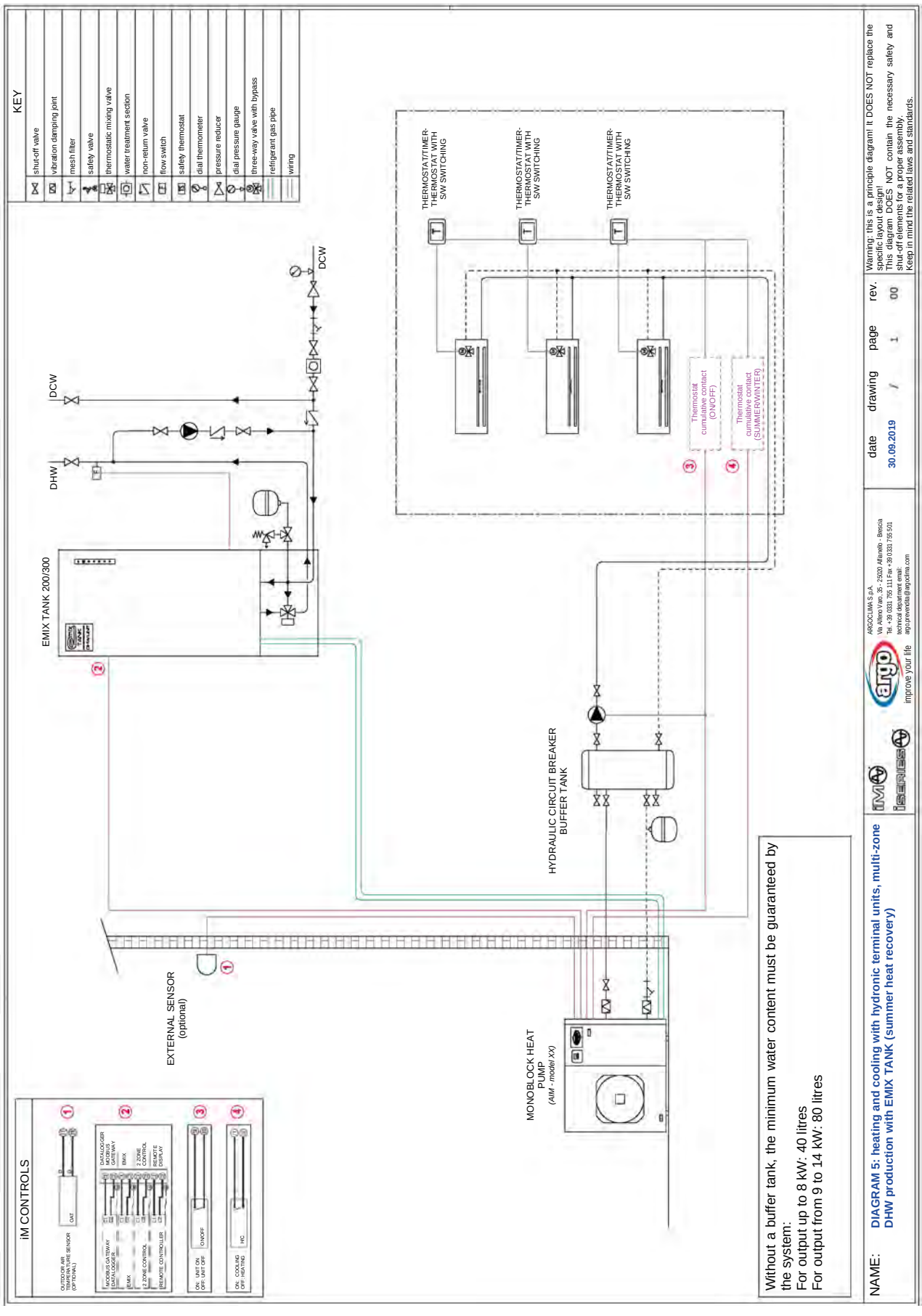

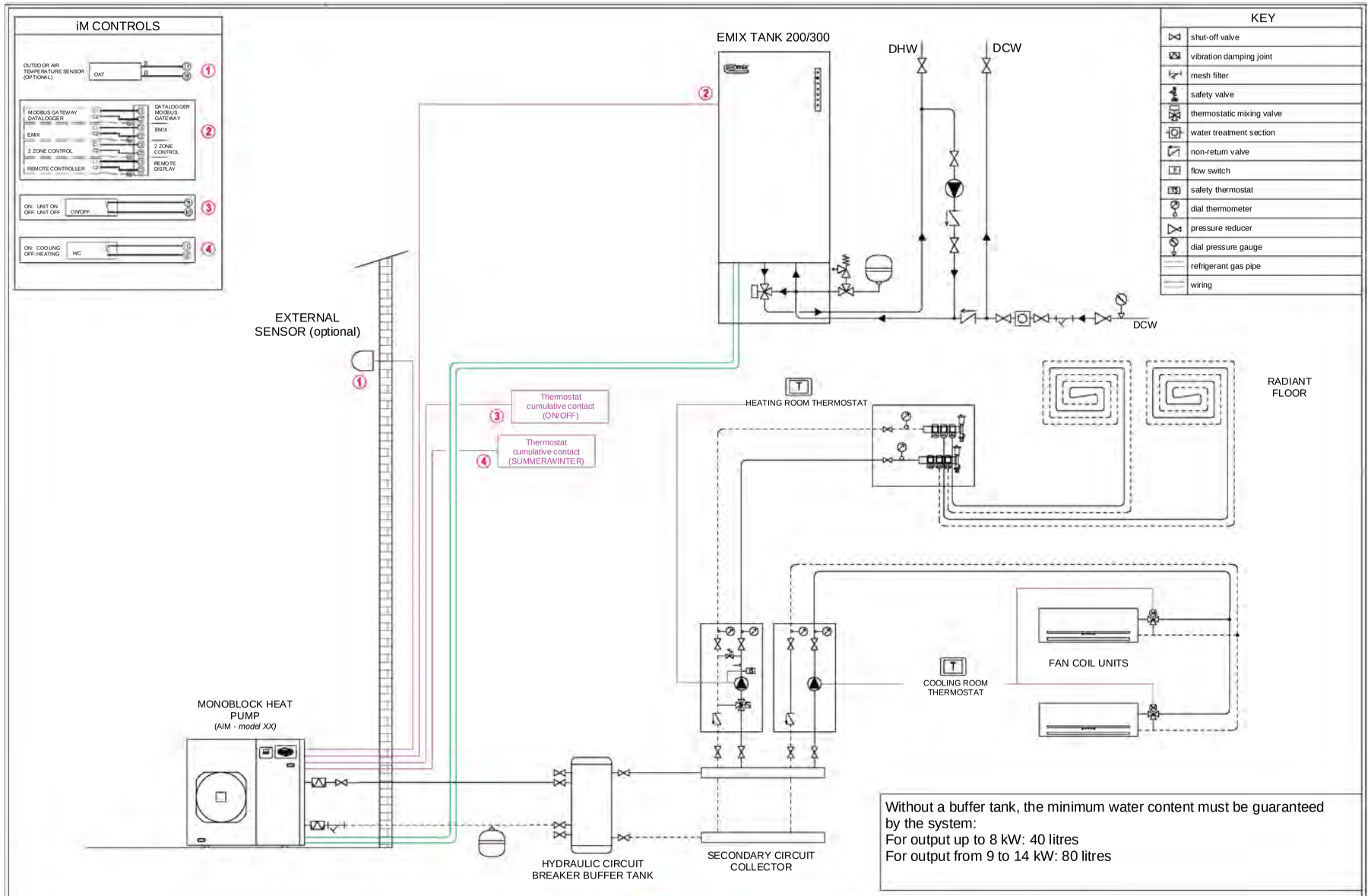

NAME: **DIAGRAM 14: radiant floor heating and cooling with fan coil units.**
DHW production with EMIX TANK (summer heat recovery)

improve your life

ARGOCLIMA S.p.A.
Via Alfeno Varo, 35 - 25020 Alfianello - Brescia
Tel. +39 0331 755 111 Fax +39 0331 755 501
technical department email:
argo.prevendita@argoclima.com

date	drawing	page	rev.
30.09.2019	/	1	00

Warning: this is a principle diagram! It DOES NOT replace the specific layout design!
This diagram DOES NOT contain the necessary safety and shut-off elements for a proper assembly.
Keep in mind the related laws and standards.

Example wiring diagram

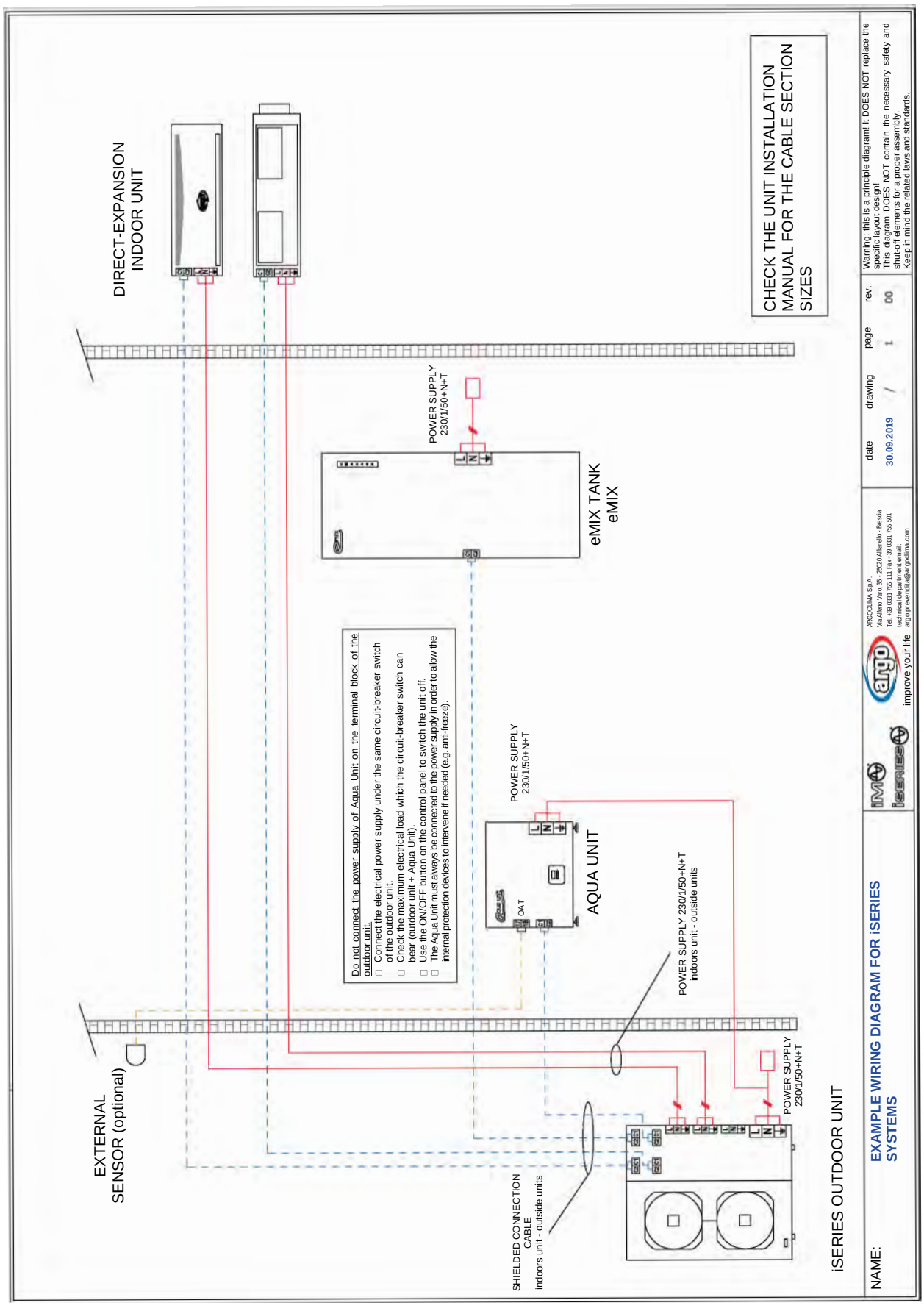

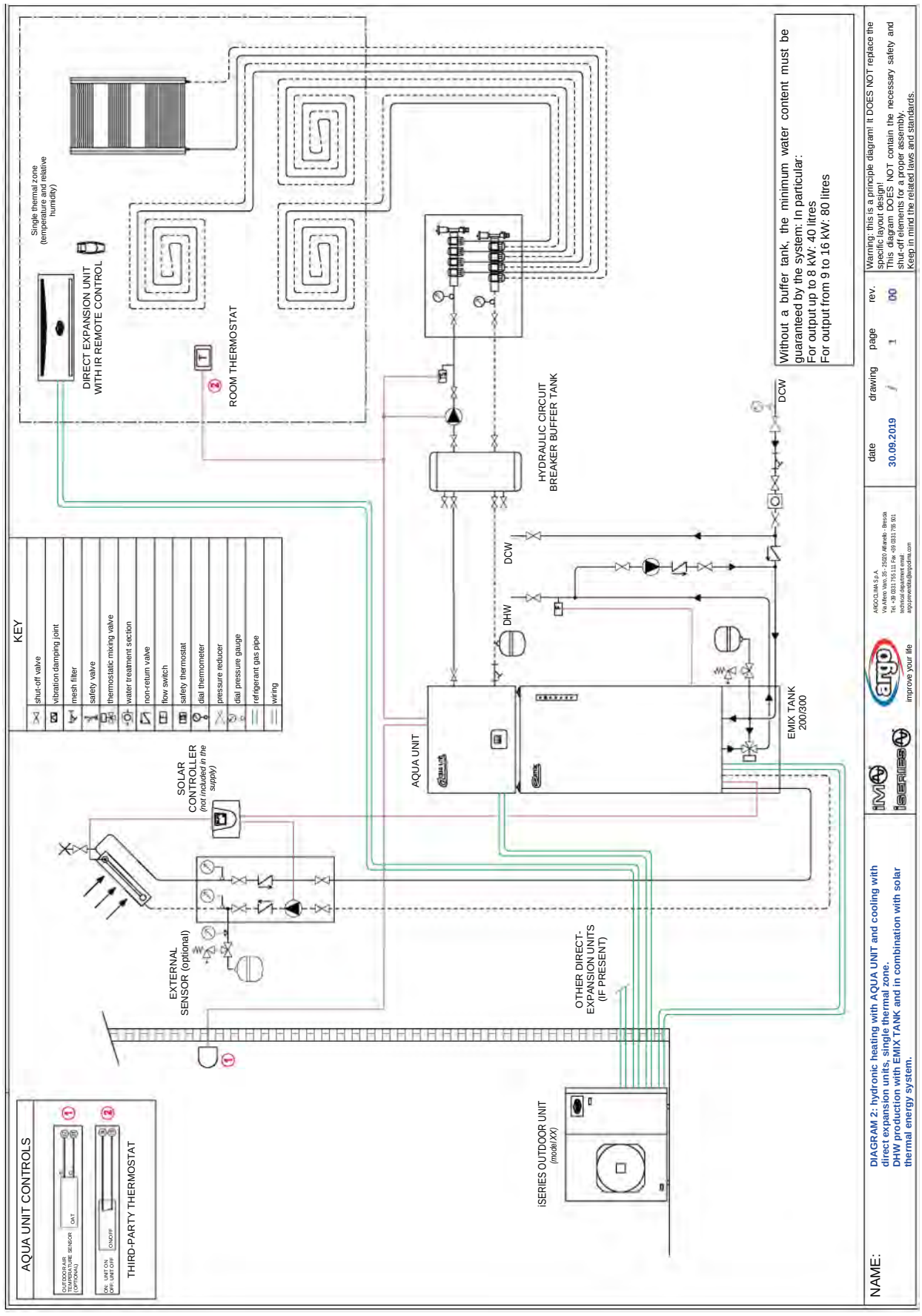
Single thermal zone (temperature and relative humidity)
DIRECT EXPANSION UNIT WITH IR REMOTE CONTROL
ROOM THERMOSTAT
HYDRAULIC CIRCUIT BREAKER BUFFER TANK
DCW
DHW
AQUA UNIT
EMIX TANK 200/300
SOLAR CONTROLLER (not included in the supply)
EXTERNAL SENSOR (optional)
OTHER DIRECT-EXPANSION UNITS (IF PRESENT)
iSERIES OUTDOOR UNIT (model XX)
KEY
shut-off valve
vibration damping joint
mesh filter
safety valve
thermostatic mixing valve
water treatment section
non-return valve
flow switch
safety thermostat
dial thermometer
pressure reducer
dial pressure gauge
refrigerant gas pipe
wiring
Without a buffer tank, the minimum water content must be guaranteed by the system: In particular:
For output up to 8 kW: 40 litres
For output from 9 to 16 kW: 80 litres
AQUA UNIT CONTROLS
OUTDOOR AIR TEMPERATURE SENSOR (OPTIONAL)
OAT
ON: UNIT ON OFF: UNIT OFF
ON/OFF
THIRD-PARTY THERMOSTAT
NAME:
DIAGRAM 2: hydronic heating with AQUA UNIT and cooling with direct expansion units, single thermal zone.
DHW production with EMIX TANK and in combination with solar thermal energy system.
ARGO CLIMA S.p.A.
Via Mons Viso 15 - 29020 Alseno - Piacenza
Tel. +39 0331 755 111 Fax +39 0331 758 951
technical department email
argotecnica@argoclima.com
improve your life
date
30.09.2019
drawing
page
1
rev.
00
Warning: this is a principle diagram! It DOES NOT replace the specific layout design!
This diagram DOES NOT contain the necessary safety and shut-off elements for a proper assembly.
Keep in mind the related laws and standards.

iSERIES - examples of installation diagrams

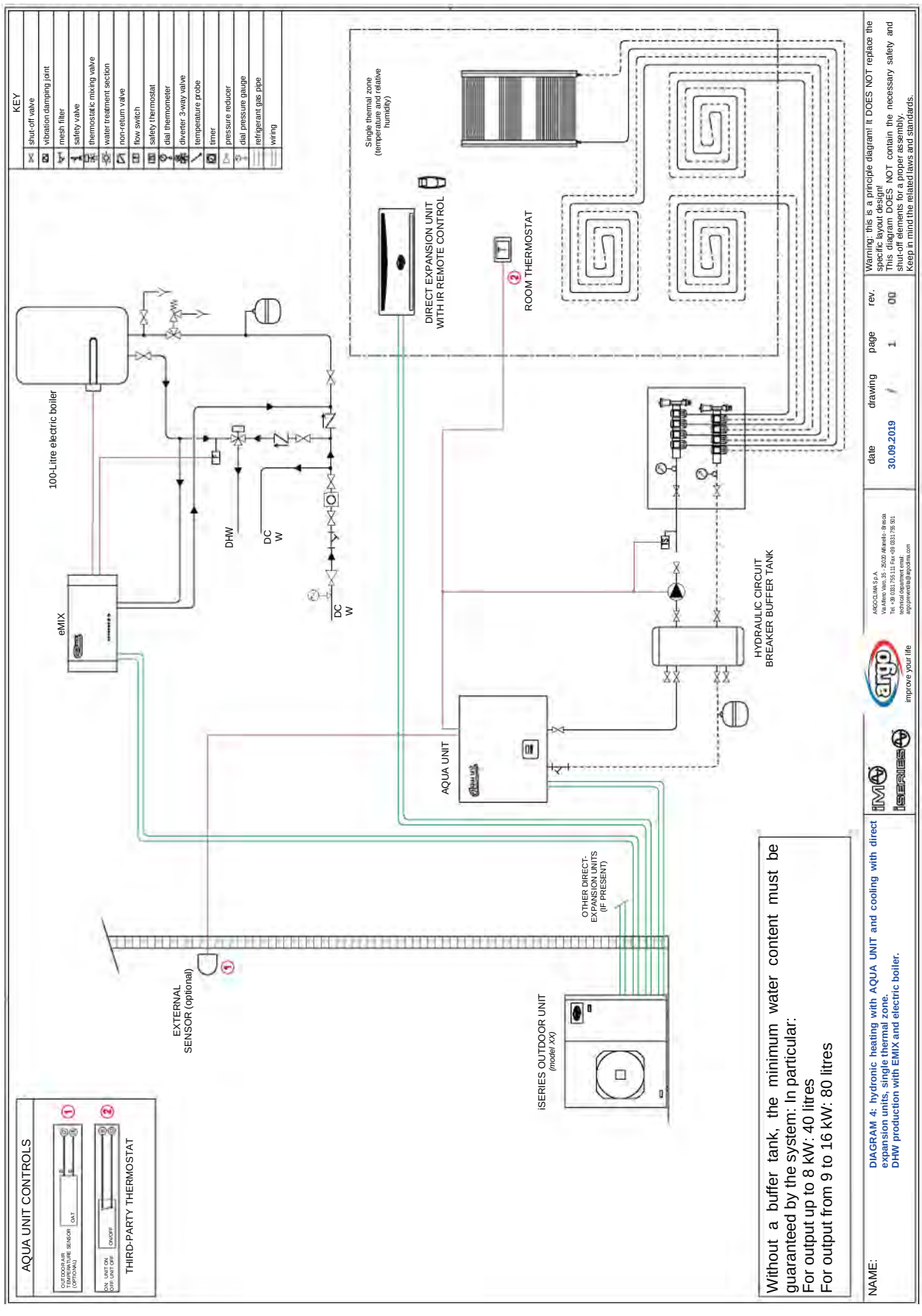

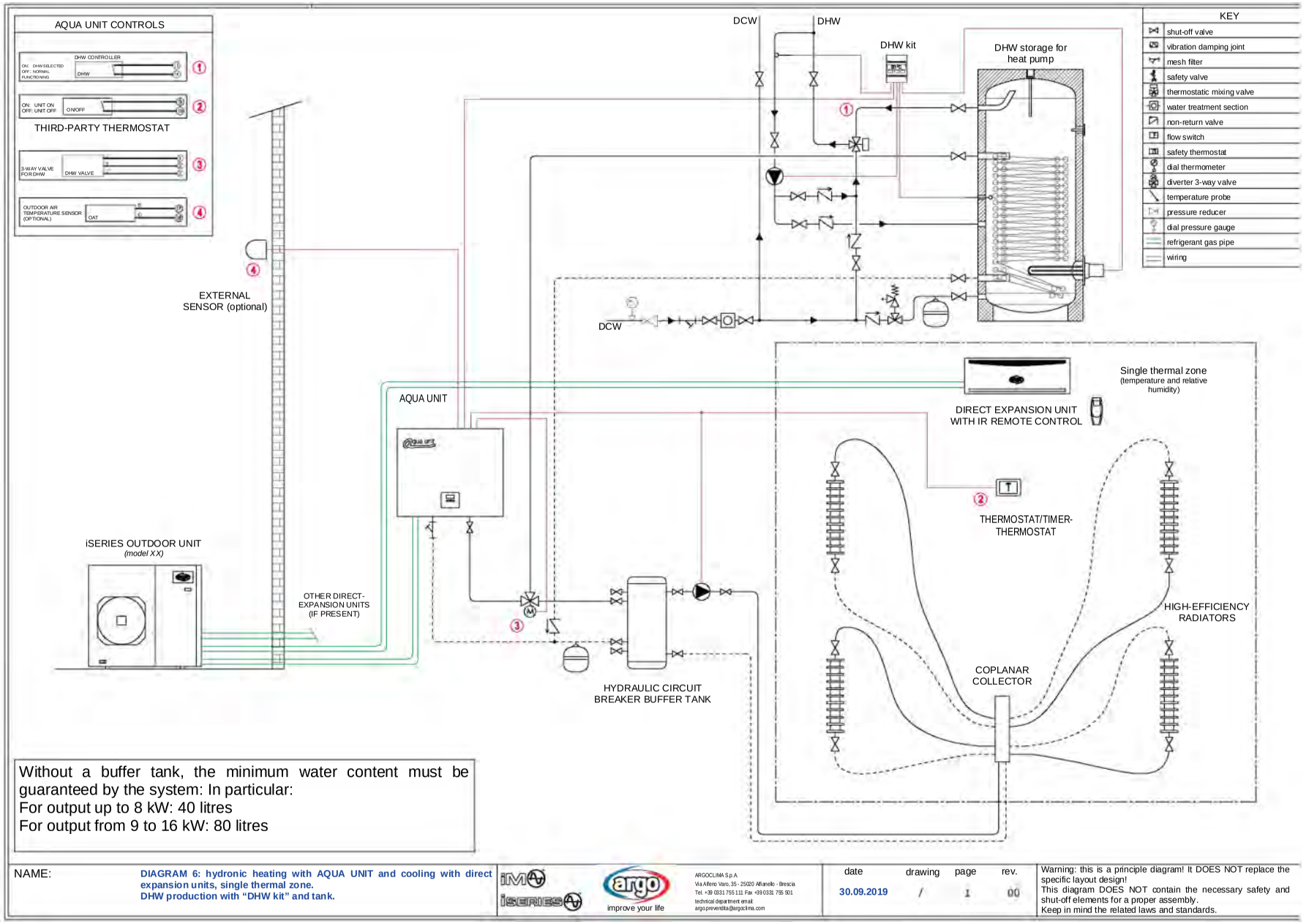

Without a buffer tank, the minimum water content must be guaranteed by the system: In particular:
For output up to 8 kW: 40 litres
For output from 9 to 16 kW: 80 litres

NAME:

DIAGRAM 6: hydronic heating with AQUA UNIT and cooling with direct expansion units, single thermal zone.
DHW production with "DHW kit" and tank.

improve your life

ARGOCLIMA S.p.A.
Via Alfeno Varo, 35 - 25020 Alfianello - Brescia
Tel. +39 0331 755 111 Fax +39 0331 755 501
technical department email:
argo.preventita@argoclima.com

date	drawing	page	rev.
30.09.2019	/	1	00

Warning: this is a principle diagram! It DOES NOT replace the specific layout design!
This diagram DOES NOT contain the necessary safety and shut-off elements for a proper assembly.
Keep in mind the related laws and standards.

improve your life

iSERIES - examples of installation diagrams

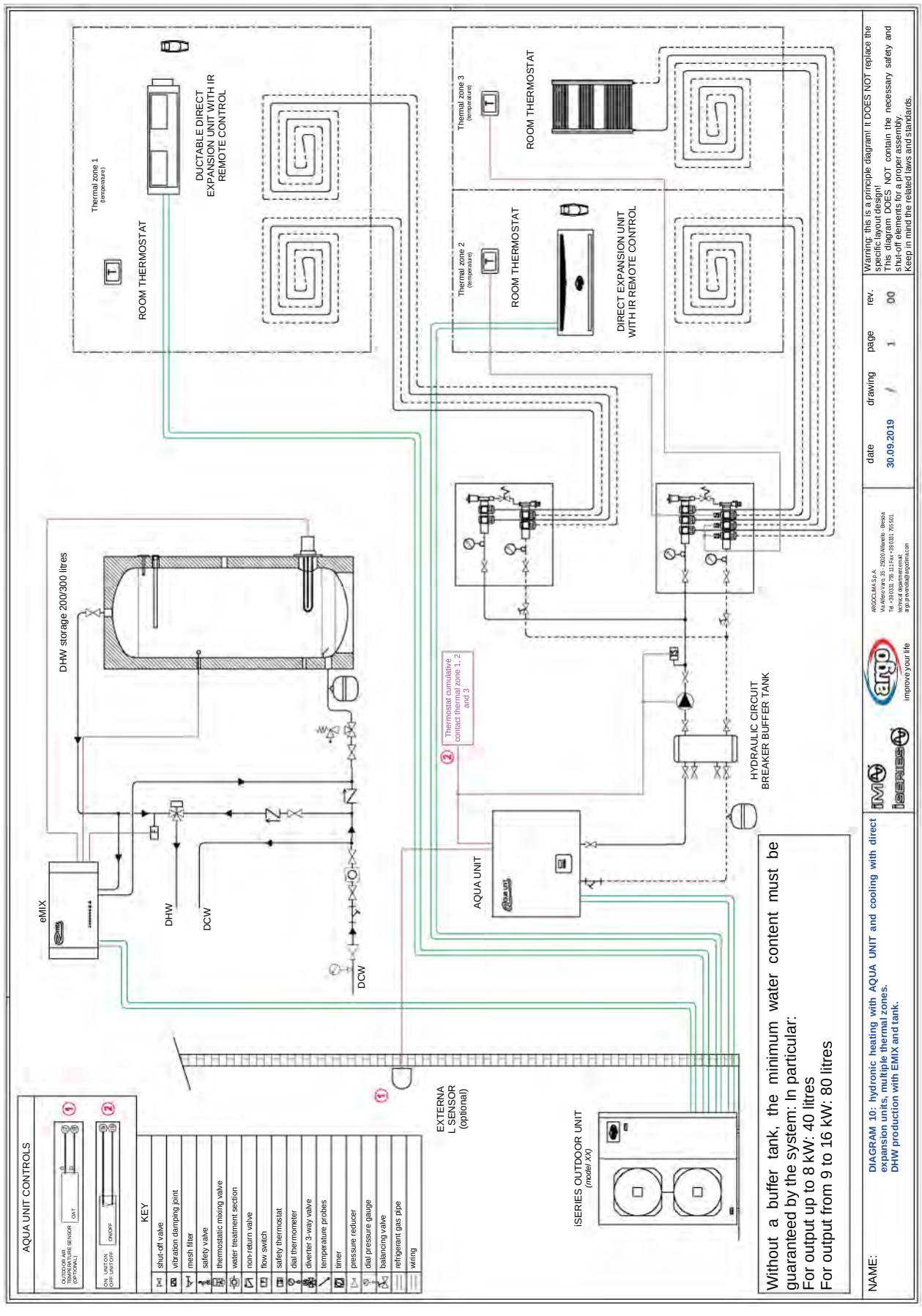

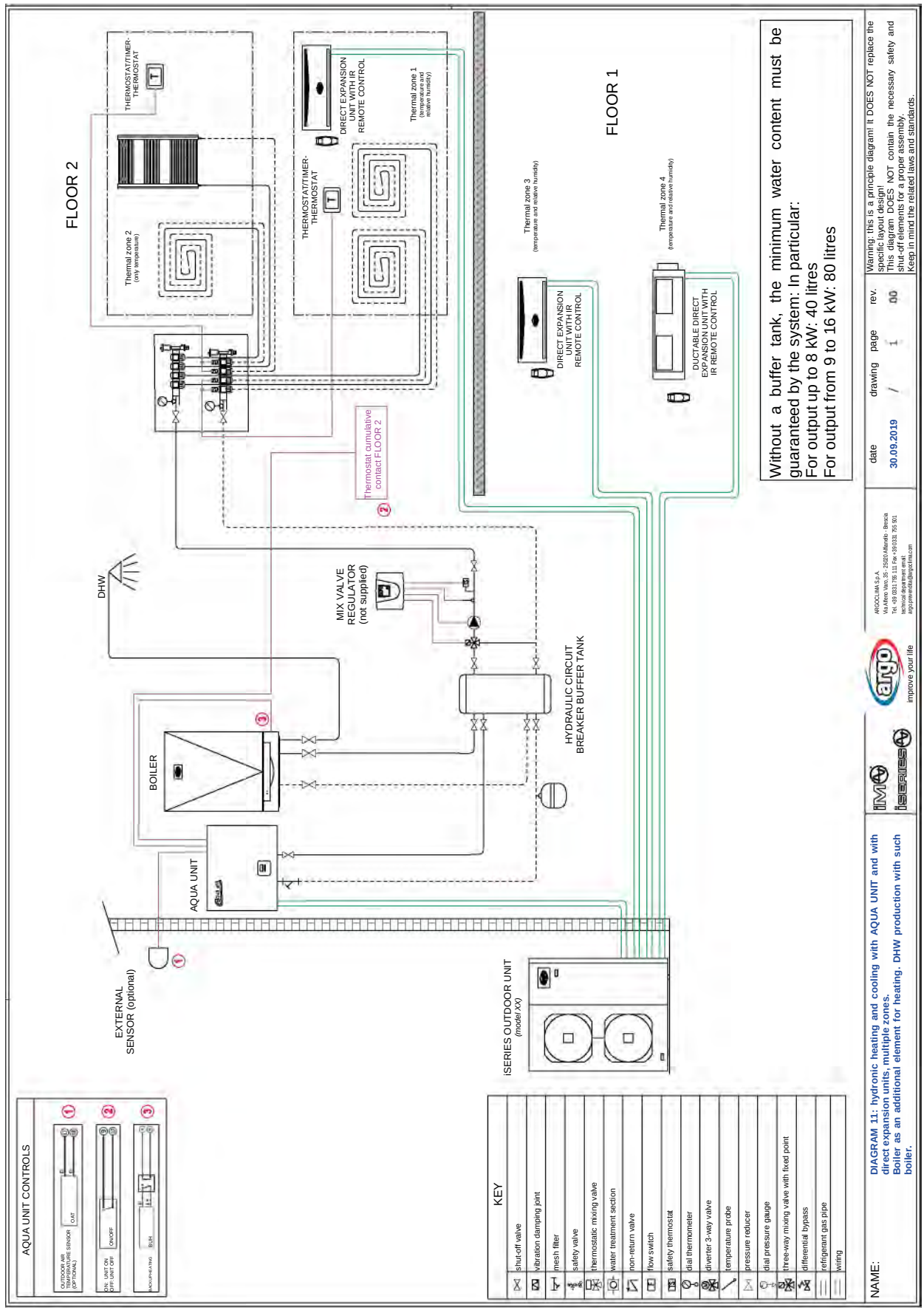
FLOOR 2
FLOOR 1
THERMOSTAT/TIMER-THERMOSTAT
Thermal zone 2 (only temperature)
THERMOSTAT/TIMER-THERMOSTAT
DIRECT EXPANSION UNIT WITH IR REMOTE CONTROL
Thermal zone 1 (temperature and relative humidity)
Thermostat cumulative contact FLOOR 2
Thermal zone 3 (temperature and relative humidity)
DIRECT EXPANSION UNIT WITH IR REMOTE CONTROL
Thermal zone 4 (temperature and relative humidity)
DUCTABLE DIRECT EXPANSION UNIT WITH IR REMOTE CONTROL
DHW
MIX VALVE REGULATOR (not supplied)
BOILER
AQUA UNIT
HYDRAULIC CIRCUIT BREAKER BUFFER TANK
EXTERNAL SENSOR (optional)
iSERIES OUTDOOR UNIT (model XX)
Without a buffer tank, the minimum water content must be guaranteed by the system: In particular:
For output up to 8 kW: 40 litres
For output from 9 to 16 kW: 80 litres
AQUA UNIT CONTROLS
OUTDOOR AIR TEMPERATURE SENSOR (OPTIONAL)
O.AT
ON/OFF
BUH
KEY
shut-off valve
vibration damping joint
mesh filter
safety valve
thermostatic mixing valve
water treatment section
non-return valve
flow switch
safety thermostat
dial thermometer
diverter 3-way valve
temperature probe
pressure reducer
dial pressure gauge
three-way mixing valve with fixed point
differential bypass
refrigerant gas pipe
wiring
NAME:
DIAGRAM 11: hydronic heating and cooling with AQUA UNIT and with direct expansion units, multiple zones.
Boiler as an additional element for heating. DHW production with such boiler.
date 30.09.2019
drawing /
page 1
rev. 00
ARGOCLIMA S.p.A.
Via Alfiero Viano, 35 - 25020 Alfianello - Brescia
Tel. +39 0331 795.111 Fax +39 0331 795 501
technical department email:
improve your life
Warning: this is a principle diagram! It DOES NOT replace the specific layout design!
This diagram DOES NOT contain the necessary safety and shut-off elements for a proper assembly.
Keep in mind the related laws and standards.

iSERIES - examples of installation diagrams

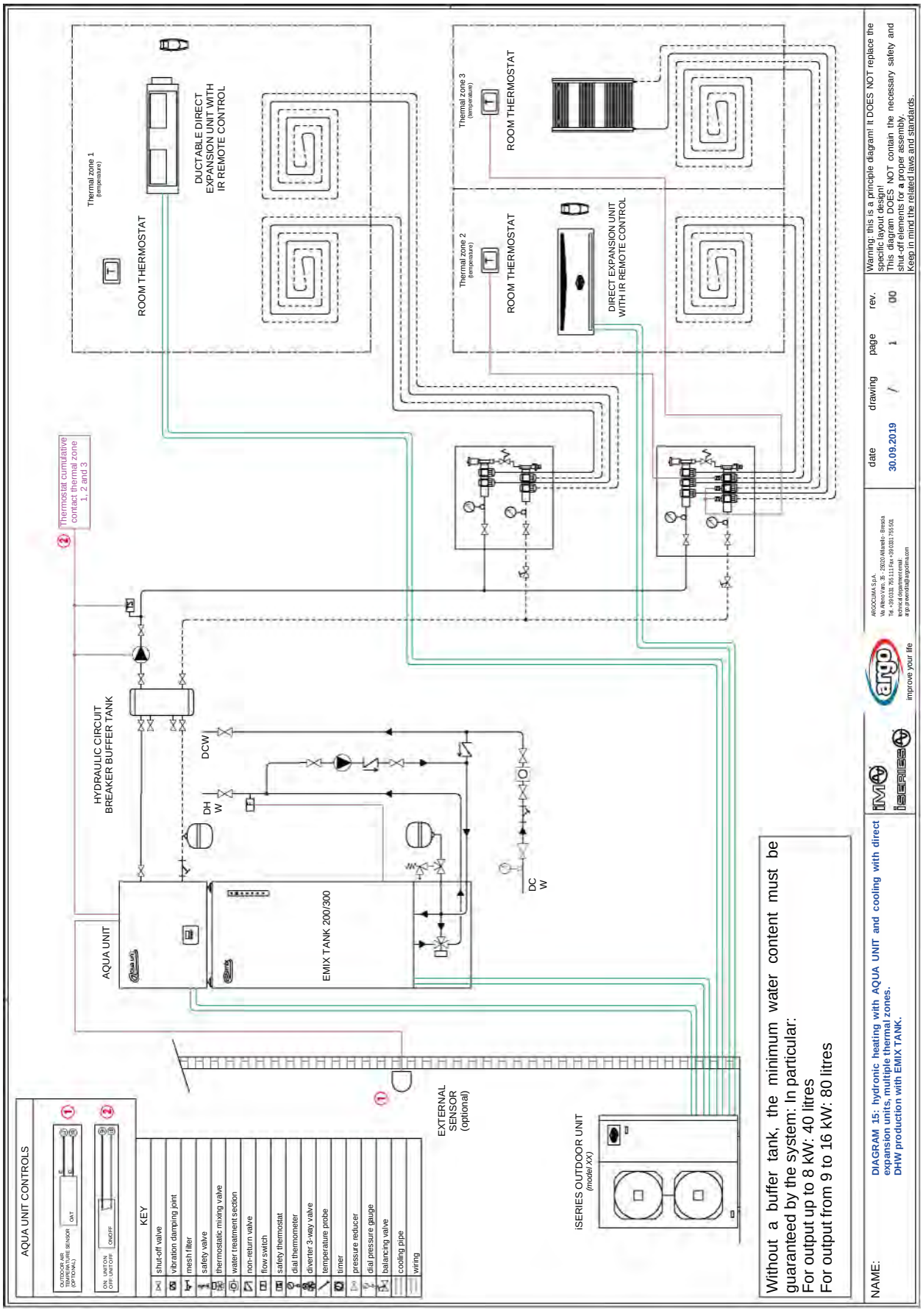

Notes

WWW

Find about our products, the company, tax incentives, news, where to buy and who you may contact in case of need on argoclima.com Download all the Argo product catalogues.

SOCIAL

Follow the news and initiatives of the Argo world on our accounts on FACEBOOK and YOUTUBE.

702020003 - 05/2020

improve your life

Argoclima S.p.A.
Società a Socio unico
Via Alfeno Varo, 35
25020 Alfianello (BS) Italy
Tel: +39 0331 755111
argoclima.com

N.B. The manufacturer assumes no responsibility for any errors or inaccuracies in the content of this catalogue, and reserves the right to make any necessary changes to its products, at any time and without notice, for technical or commercial reasons.

Argo is a brand of Argoclima S.p.A., a leading European company in climate control, heating and air treatment.